SAFETY ON THIS JOB
DEPENDS ON YOU

ESTATE MON BIJOU

ST. CROIX, U.S. VIRGIN ISLANDS

PLANS
FOR
CONSTRUCTION OF

FLOOD CONTROL CHANNEL

DEPARTMENT OF THE ARMY
JACKSONVILLE DISTRICT, CORPS OF ENGINEERS
JACKSONVILLE, FLORIDA

TO ACCOMPANY INVITATION
NO. W912EP-04-B-0005
DATED:

2004

(VE) "INCREASE PROFIT -- SUBMIT VECP'S"

D. O. FILE NUMBERS 109-36,488 AND 109-36,491

$$USERNAME$$ $$$DGN$SPECIFICATION$$$$$$ $$$$$$SYTIME$$$$$

SAFETY ON THIS JOB DEPENDS ON YOU

REVISIONS					
NO.	SYM.	ZONE	DESCRIPTION	DATE	APPROVED
4			REVISED TO ACCOMPANY AMEND. 0001	8-24-92	

ESTATE MON BIJOU
ST. CROIX, U.S. VIRGIN ISLANDS

PLANS
FOR
CONSTRUCTION OF

FLOOD CONTROL CHANNEL

DEPARTMENT OF THE ARMY
JACKSONVILLE DISTRICT, CORPS OF ENGINEERS
JACKSONVILLE, FLORIDA
2004

INDEX OF DRAWINGS

SHEET NO.	DWG. NO.	TITLE
GENERAL		
	1/1	INDEX TO DRAWINGS
	1/2	VICINITY AND RIGHT OF WAY
CHANNEL		
	2/1	SITE PLAN
	2/2	SITE PLAN
	2/3	SITE PLAN
	2/4	SITE PLAN
	2/5	SITE PLAN
CHANNEL		
	3/1	CENTERLINE PROFILE
	3/2	CENTERLINE PROFILE
	3/3	CENTERLINE PROFILE
GABION DROP STRUCTURES		
	4/1	DETAILS
TYPICAL SECTIONS		
	5/1	CHANNEL SECTIONS
	5/2	LEVEE SECTIONS
	5/3	CHANNEL SECTION TRANSITION
	5/4	CHANNEL SECTION TRANSITION
	5/5	CHANNEL SECTION TRANSITION
	5/6	CHANNEL SECTION TRANSITION
MISCELLANEOUS AND OPS ITEMS		
	6/1	CATTLE CROSSING PLAN AND SECTION
	6/2	CATTLE CROSSING DETAILS
	6/3	CULVERT AND RISER DETAILS
	6/4	TYPICAL SECTION OF ACCESS ROADS
	6/5	FENCE LAYOUT
	6/6	CHAIN LINK FENCE DETAILS
	6/7	CHAIN LINK GATE DETAILS
	6/8	FARM FENCE DETAILS
	6/9	WATER LINE RELOCATIONS
	6/10	WATER LINE RELOCATIONS
	6/11	WATER LINE DETAILS
DISPOSAL AREA		
	7/1	DISPOSAL SITE AND ACCESS
CLAY LINED POND		
	8/1	EXISTING POND LAYOUT
	8/2	CROSS SECTIONS

THIS PROJECT WAS DESIGNED BY THE JACKSONVILLE DISTRICT OF THE U.S. ARMY CORPS OF ENGINEERS. THE INITIALS OR SIGNATURES AND REGISTRATION DESIGNATIONS OF INDIVIDUALS APPEAR ON THESE PROJECT DOCUMENTS WITHIN THE SCOPE OF THEIR EMPLOYMENT AS REQUIRED BY ER 1110-1-8152.

PREPARED BY: — CHIEF, CIVIL DESIGN BRANCH
CHIEF, STRUCTURES SECTION
SUBMITTED BY: — CHIEF, DESIGN BRANCH
APPROVAL RECOMMENDED: — CHIEF, ENGINEERING DIVISION
APPROVED: — (1 COL. C.T.) — DEP. DISTRICT ENGINEER

DESN. CHK.: K.H.W./E.B.M. | DWN. BY: K.H.W. | CHK. BY:

DEPARTMENT OF THE ARMY
JACKSONVILLE DISTRICT, CORPS OF ENGINEERS
JACKSONVILLE, FLORIDA

ESTATE MON BIJOU
ST. CROIX, U.S. VIRGIN ISLANDS

FLOOD CONTROL CHANNEL

GENERAL
INDEX TO DRAWINGS

INV. NO. W912EP-04-B-0005 | SIZE F | DRAWING NO. 1/1
DATED: 6 JULY 1994
SCALE: AS SHOWN | DATED: AUGUST 1993 | SHEET 1 OF 29

D. O. FILE NO. 109-36,488

$$USERNAME$$ $$$$DESIGNSPECIFICATION$$$$$$ $$$$$$SYSTIME$$$$$$

.../dms00722/VIM80101.DGN 03/18/2004 08:28:08 AM

SAFETY ON THIS JOB DEPENDS ON YOU

REVISIONS					
NO.	SYM.	ZONE	DESCRIPTION	DATE	APPROVED

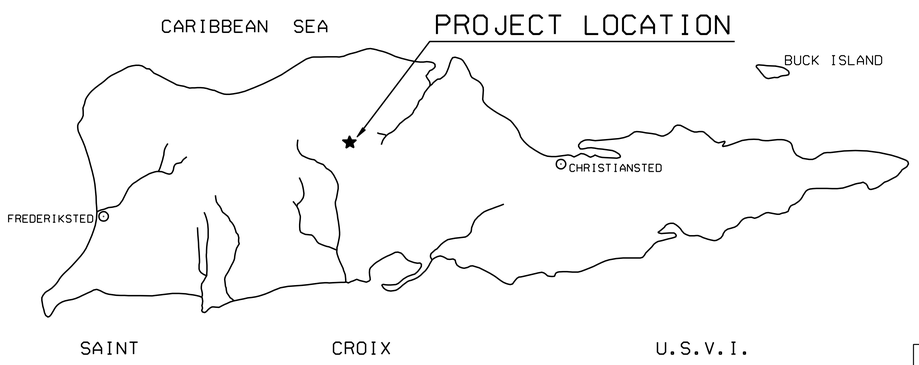

CONTROL MONUMENTS			
DESIGNATION	X	Y	ELEV.
MONBIJOU 04	1,076,221.453	74,807.876	116.661
MONBIJOU 05	1,074,927.558	74,354.942	180.323
MONBIJOU 06	1,074,189.595	74,140.823	184.115
MONBIJOU 07	1,073,178.447	73,744.619	157.138

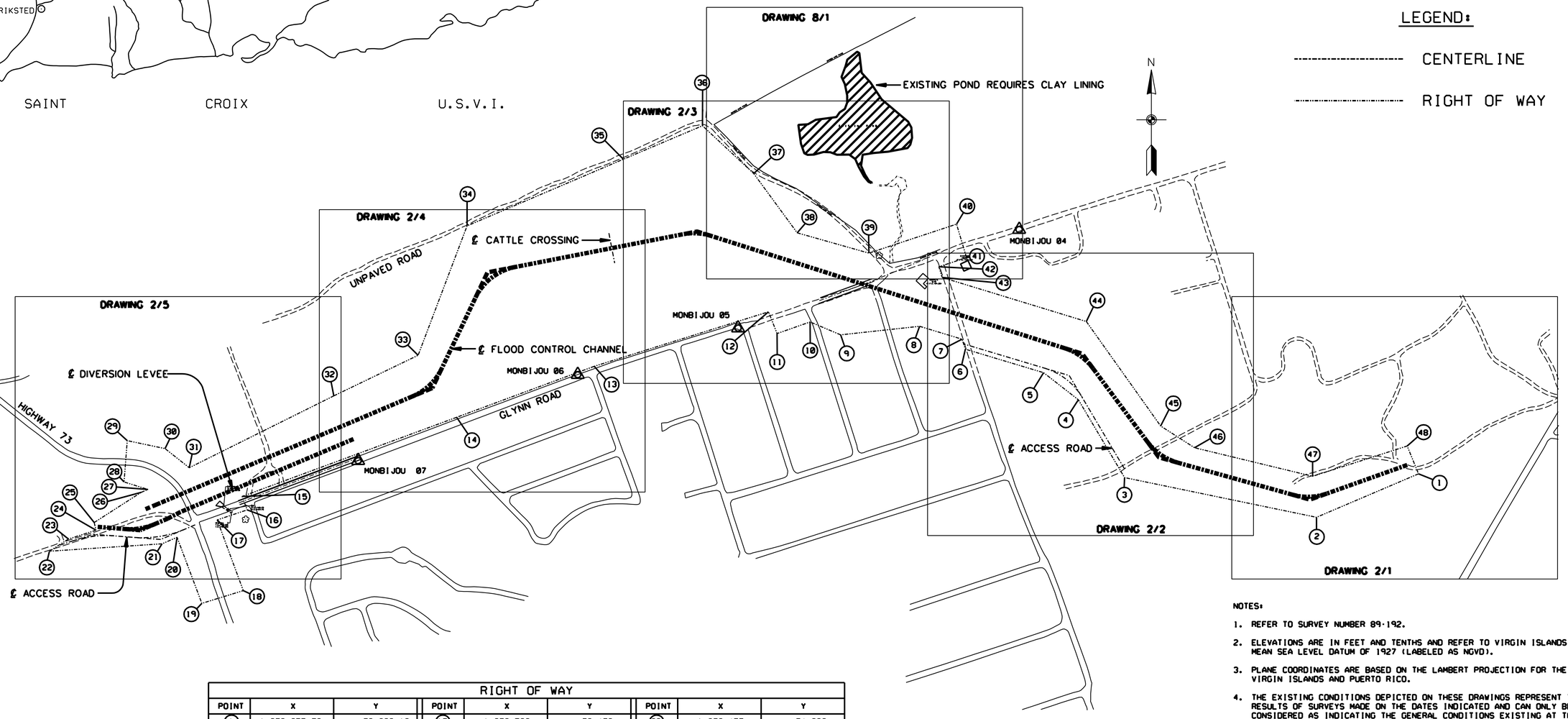

LEGEND:

CENTERLINE

RIGHT OF WAY

RIGHT OF WAY								
POINT	X	Y	POINT	X	Y	POINT	X	Y
1	1.078.055.73	73.682.18	17	1.072.530	73.472	33	1.073.455	74.230
2	1.077.590	73.484	18	1.072.650	73.147	34	1.073.680	74.825
3	1.076.707	73.667	19	1.072.459	73.088	35	1.074.400	75.132
4	1.076.494	74.025	20	1.072.345	73.392	36	1.074.764	75.286
5	1.076.334	74.150	21	1.072.276	73.362	37	1.075.000	75.066
6	1.075.974	74.258	22	1.071.758	73.328	38	1.075.200	74.793
7	1.075.959	74.304	23	1.071.845.31	73.384.07	39	1.075.530	74.700
8	1.075.763	74.363	24	1.071.972.07	73.424.92	40	1.075.933	74.833
9	1.075.400	74.324	25	1.071.964.05	73.460.32	41	1.075.979.15	74.679.16
10	1.075.259	74.383	26	1.072.180	73.599	42	1.075.851.69	74.637.07
11	1.075.107	74.330	27	1.072.211	73.612	43	1.075.867.45	74.587.67
12	1.075.068	74.430	28	1.072.101	73.647	44	1.076.531	74.385
13	1.074.266	74.179	29	1.072.116	73.837	45	1.076.873	73.904
14	1.073.632	73.944	30	1.072.290	73.800	46	1.077.029	73.804
15	1.072.645	73.580	31	1.072.401	73.712	47	1.077.572	73.673
16	1.072.668	73.518	32	1.073.067	74.043	48	1.078.008	73.812

NOTES:

1. REFER TO SURVEY NUMBER 89-192.
2. ELEVATIONS ARE IN FEET AND TENTHS AND REFER TO VIRGIN ISLANDS USGS MEAN SEA LEVEL DATUM OF 1927 (LABELED AS NGVD).
3. PLANE COORDINATES ARE BASED ON THE LAMBERT PROJECTION FOR THE VIRGIN ISLANDS AND PUERTO RICO.
4. THE EXISTING CONDITIONS DEPICTED ON THESE DRAWINGS REPRESENT THE RESULTS OF SURVEYS MADE ON THE DATES INDICATED AND CAN ONLY BE CONSIDERED AS INDICATING THE GENERAL CONDITIONS EXISTING AT THAT TIME.
5. THE SURVEY DATA WAS OBTAINED WITH A WILD T1000 TOTAL STATION WITH A DI-1000 EDM AND A CMT MC-11 DATA COLLECTOR. SURVEY DATES ARE MAY THROUGH JULY 1990.
6. REFER TO FIELD BOOKS "90 ST. CROIX USVI 26 THROUGH 33".
7. THE LOCATIONS OF THE WORK SITE, DISPOSAL AREA, AND ACCESS ARE SHOWN ON DRAWING NUMBER 7/1.

DEPARTMENT OF THE ARMY
JACKSONVILLE DISTRICT, CORPS OF ENGINEERS
JACKSONVILLE, FLORIDA

ESTATE MON BIJOU
ST. CROIX, U.S. VIRGIN ISLANDS

FLOOD CONTROL CHANNEL

GENERAL
VICINITY AND RIGHT OF WAY

DESIGN ENG.:				
DWN. BY	CKD. BY	INV. NO.	SIZE F	DRAWING NO. 1/2
		DATED:		
		SCALE: AS SHOWN	DATED: AUGUST 1993	SHEET OF

D. O. FILE NUMBER 109-36,488

$$USERNAME$$ $$$$SIGNSPECIFICATION$$$$$$$$$$$$TIME$$$$$

SAFETY ON THIS JOB DEPENDS ON YOU

REVISIONS					
NO.	SYM.	ZONE	DESCRIPTION	DATE	APPROVED

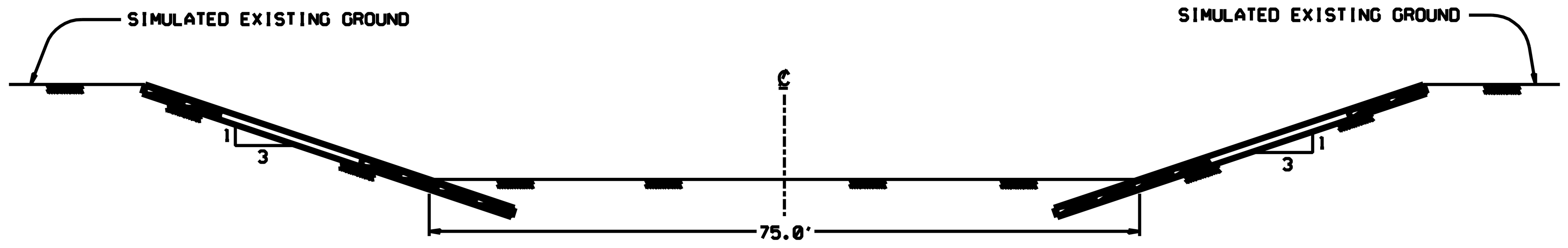

TYPICAL SECTION BETWEEN STATIONS 2·20 AND 10·00

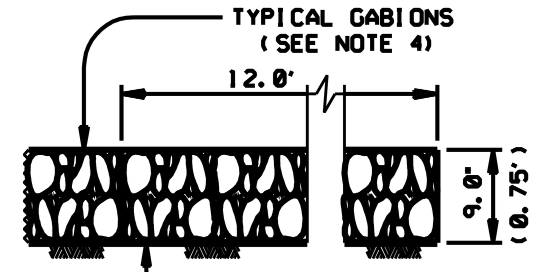

TYPICAL GABION DETAIL
(NOT TO SCALE)

INSET

10 5 0 10 20FT

DRAWING NUMBER 2/2

SURVEY LEGEND

- BUILDINGS
- ROADS
- UNPAVED ROADS
- CULVERT, BRIDGE, & HEADWALL STRUCTURE
- WALLS
- GUARDRAIL
- STREAM OR SHORE LINE
- LAKE OR POND
- WOODED AREA
- BRUSH AREA
- FENCE
- TREE
- PALM
- POWER POLE
- LIGHT POLE
- FLAG POLE
- VALVE
- MANHOLE
- FIRE HYDRANT
- POST
- SIGN
- MONUMENT
- TARGET
- SPOT ELEVATION 28.8

CONTROL MONUMENTS			
DESIGNATION	X	Y	ELEV.
MB·01	1,076,221.539	74,807.760	116.619
MB·02	1,074,927.464	74,355.224	180.311
MB·03	1,074,189.424	74,141.343	184.057
MN·04	1,073,178.151	73,745.479	156.948

NOTES:

1. THE LABEL 1 ON 3 INDICATES A SLOPE OF 1 VERTICAL ON 3 HORIZONTAL.
2. THE DROP STRUCTURE AND CHANNEL INVERT ELEVATIONS ARE SHOWN ON DRAWINGS 3/1 THROUGH 3/3.
3. GABIONS SHALL BE PLACED ON THE CHANNEL SIDE SLOPES BETWEEN STATIONS 2·20 AND 10·00. THIS GABION REVETMENT SHALL EXTEND INTO THE CHANNEL BOTTOM TO A DEPTH OF 3 FEET.
4. THE SIDE SLOPE GABIONS BETWEEN STATIONS 2·20 AND 10·00 SHALL BE IN 12' X 3' X 0.75' (9") GABION UNITS. FILTER CLOTH SHALL BE PLACED UNDER ALL GABION BASKETS. REVETMENT SHALL EXTEND TO THE TOP EDGE OF THE SLOPE.
5. THE GABION DETAIL SHOWN IN THE INSET APPLIES TO SIDE SLOPE GABIONS BETWEEN STATIONS 2·20 AND 10·00 ONLY. SEE DRAWING 4/1 FOR THE TYPICAL GABION DETAIL FOR ALL OTHER GABIONS.

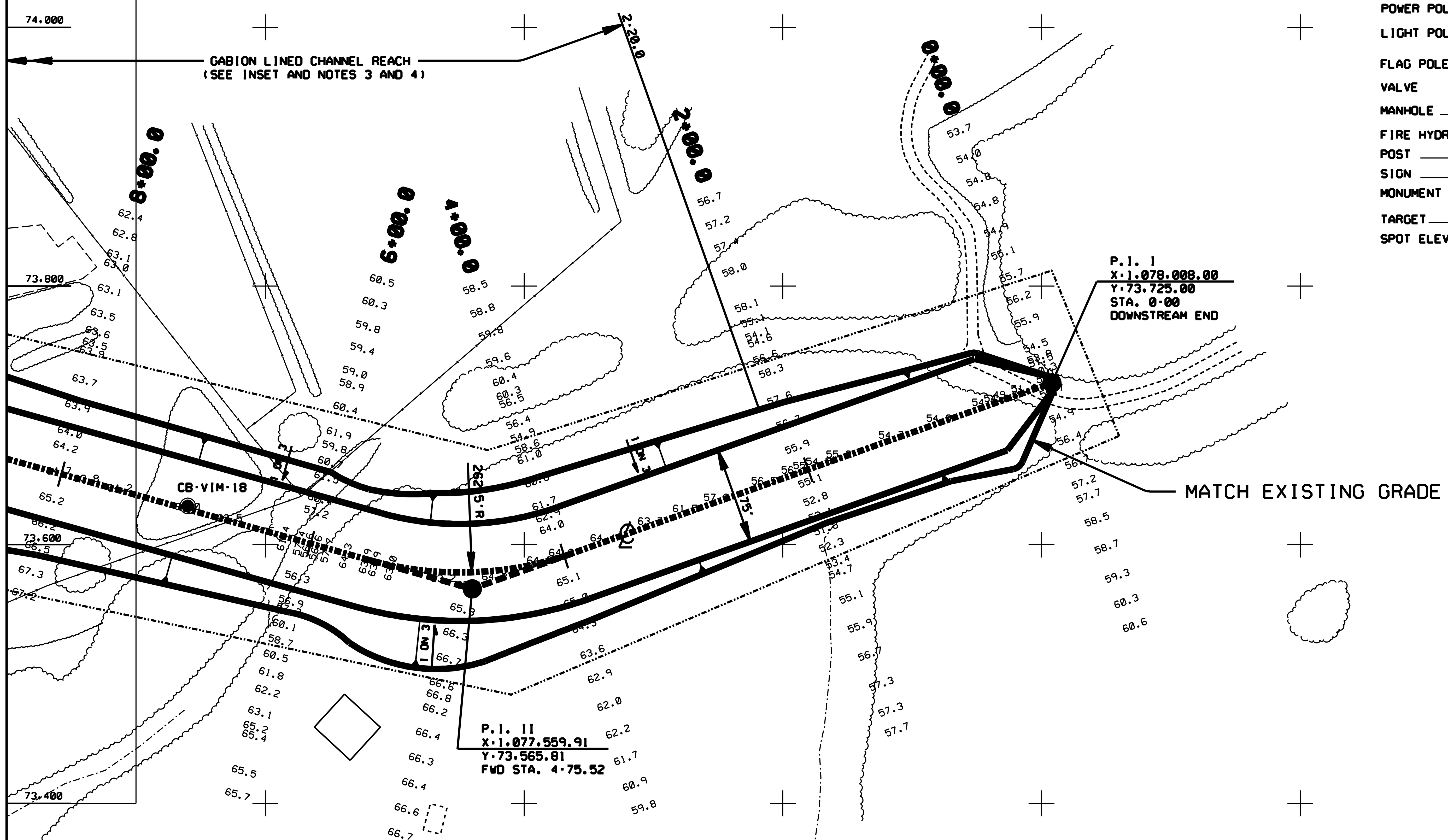

NOTE:

RELOCATION OF TEMPORARY AND PERMANENT POWER, TELEPHONE, AND CABLE TV LINES WILL BE PERFORMED BY RESPECTIVE OWNERS. CONTRACTOR IS RESPONSIBLE FOR THE COORDINATION OF THIS WORK WITH UTILITY OWNERS.

LEGEND

● CORE DRILL HOLE

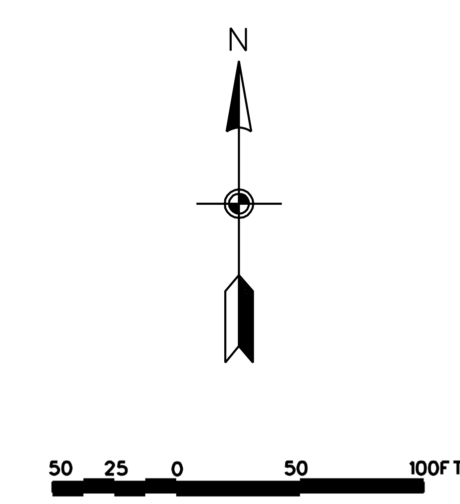

DEPARTMENT OF THE ARMY
JACKSONVILLE DISTRICT, CORPS OF ENGINEERS
JACKSONVILLE, FLORIDA

ESTATE MON BIJOU
ST. CROIX, U.S. VIRGIN ISLANDS

FLOOD CONTROL CHANNEL

CHANNEL
SITE PLAN

DESIGN ENG.:		INV. NO.	SIZE	DRAWING NO.
DWN. BY	CKD. BY	DATED:	F	2/1
		SCALE: AS SHOWN	DATED: AUGUST 1993	SHEET OF

D. O. FILE NUMBER 109-36,488

.../dms00722/VIMB0201_1.dgn 03/18/2004 08:28:12 AM

SAFETY ON THIS JOB DEPENDS ON YOU

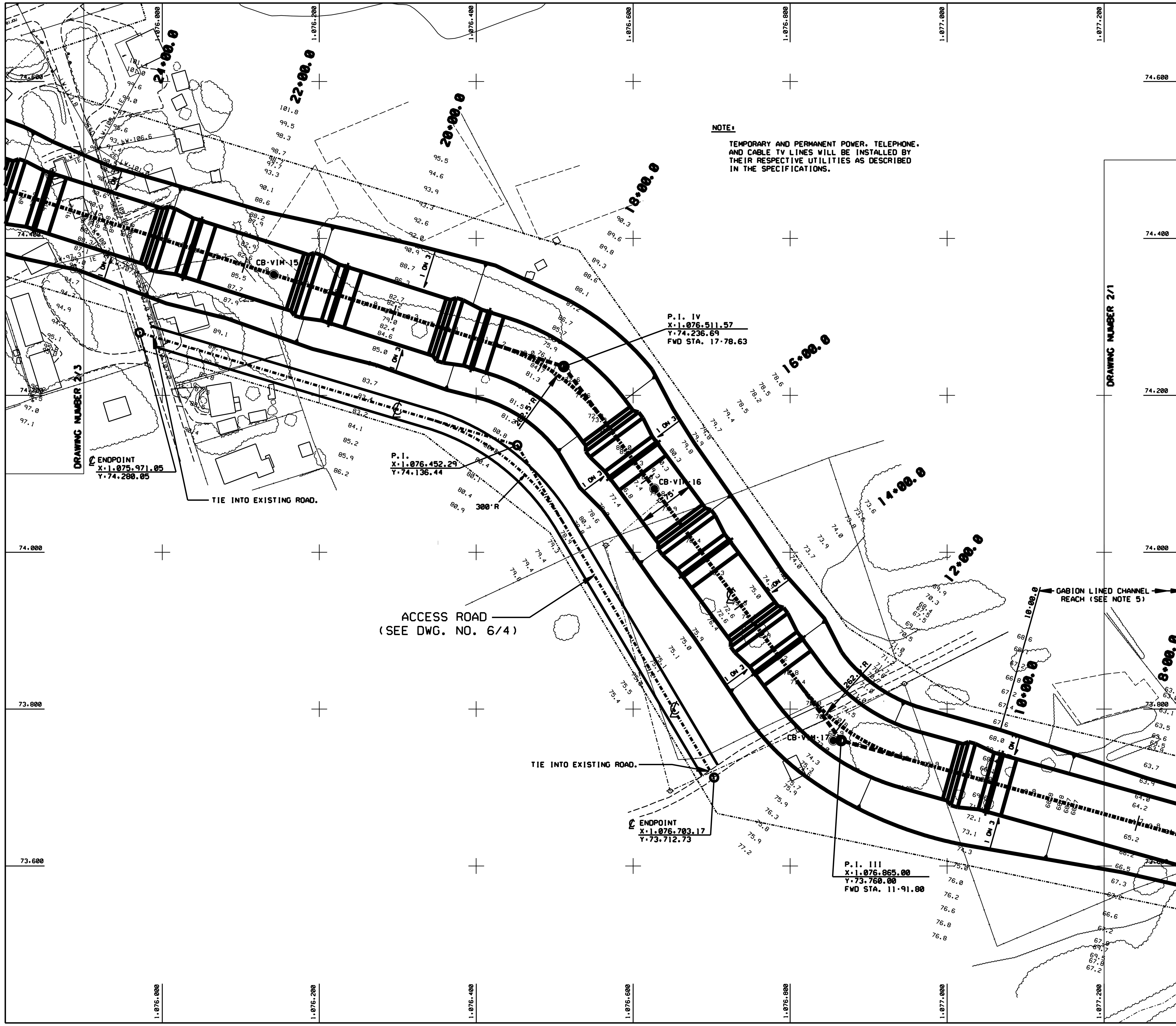

REVISIONS					
NO.	SYM.	ZONE	DESCRIPTION	DATE	APPROVED

NOTES:

1. THE LABEL 1 ON 3 INDICATES A SLOPE OF 1 VERTICAL ON 3 HORIZONTAL.
2. THE DROP STRUCTURE AND CHANNEL INVERT ELEVATIONS ARE SHOWN ON DRAWINGS 3/1 THROUGH 3/3.
3. THE DROP STRUCTURE DETAILS ARE SHOWN ON DRAWING 4/1.
4. THE SURVEY LEGEND IS SHOWN ON DRAWING 2/1.
5. THE DIRECTIONS FOR THE GABION LINED CHANNEL REACH ARE SHOWN ON DRAWING 2/1.
6. CONTRACTOR MUST MAINTAIN ACCESS TO PARCELS 246 J AND 246 O AT ALL TIMES.

LEGEND

◉ CORE DRILL HOLE

FLOW / CREST — GABION DROP STRUCTURE

N

50 25 0 50 100FT

DEPARTMENT OF THE ARMY
JACKSONVILLE DISTRICT, CORPS OF ENGINEERS
JACKSONVILLE, FLORIDA

ESTATE MON BIJOU
ST. CROIX, U.S. VIRGIN ISLANDS

FLOOD CONTROL CHANNEL

CHANNEL
SITE PLAN

DESIGN ENG.:		INV. NO.	SIZE	DRAWING NO.
DWN. BY	CKD. BY	DATED:	F	2/2
		SCALE: AS SHOWN	DATED: AUGUST 1993	SHEET OF

D. O. FILE NUMBER 109-36,488

$$USERNAME$$ $$$DGN$$SPECIFICATION$$$$$$ $$$$$$SYTIME$$$$$

.../dms00722/VIMB0202.DGN 03/31/2004 08:30:40 AM

SAFETY ON THIS JOB DEPENDS ON YOU

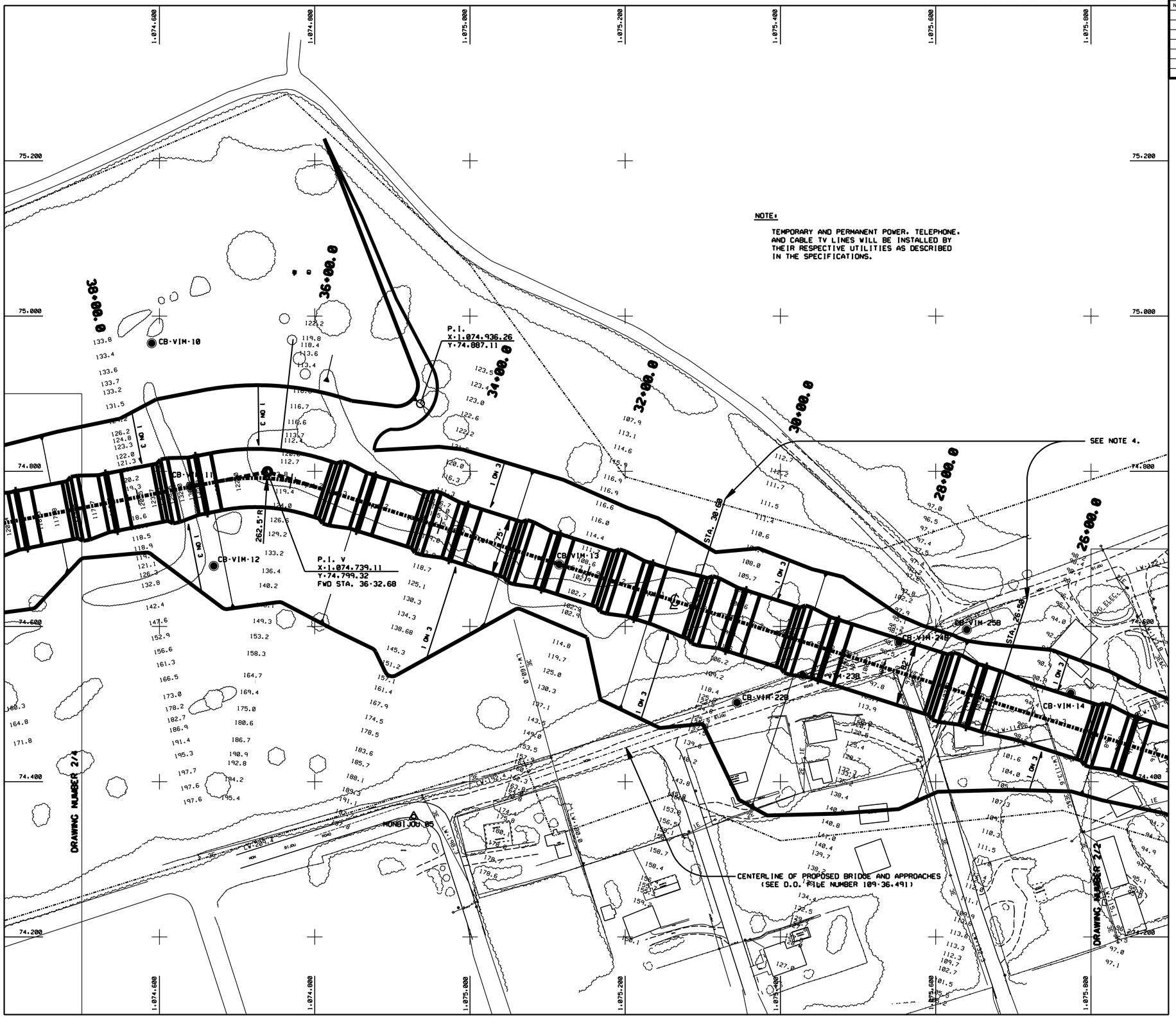

REVISIONS

NO.	SYM.	ZONE	DESCRIPTION	DATE	APPROVED

NOTES:

1. THE LABEL 1 ON 3 INDICATES A SLOPE OF 1 VERTICAL ON 3 HORIZONTAL.
2. THE DROP STRUCTURE AND CHANNEL INVERT ELEVATIONS ARE SHOWN ON DRAWINGS 3/1 THROUGH 3/3.
3. THE DROP STRUCTURE DETAILS ARE SHOWN ON DRAWING 4/1.
4. THE CHANNEL BOTTOM WIDTH IS 82 FEET BETWEEN STATIONS 26+50 AND 30+60. THERE IS A 40-FOOT LONG TRANSITION TO A BOTTOM WIDTH OF 75 FEET AT EACH END OF THIS REACH.
5. THE SURVEY LEGEND IS SHOWN ON DRAWING 2/1.

LEGEND

CORE DRILL HOLE

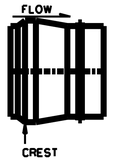

GABION DROP STRUCTURE

N

50 25 0 50 100FT

DEPARTMENT OF THE ARMY
JACKSONVILLE DISTRICT, CORPS OF ENGINEERS
JACKSONVILLE, FLORIDA

ESTATE MON BIJOU
ST. CROIX, U.S. VIRGIN ISLANDS

FLOOD CONTROL CHANNEL

CHANNEL
SITE PLAN

DESIGN ENG.:			
DWN. BY	CKD. BY	INV. NO.	SIZE F	DRAWING NO. 2/3
		DATED:		
		SCALE: AS SHOWN	DATED: AUGUST 1993	SHEET OF

D. O. FILE NUMBER 109-36,488

$$USERNAME$$ $$$DGN$$SPECIFICATION$$$$$$ $$$$$$SYTIME$$$$$

.../dms00722/VIMB0203.DGN 03/18/2004 08:28:17 AM

SAFETY ON THIS JOB DEPENDS ON YOU

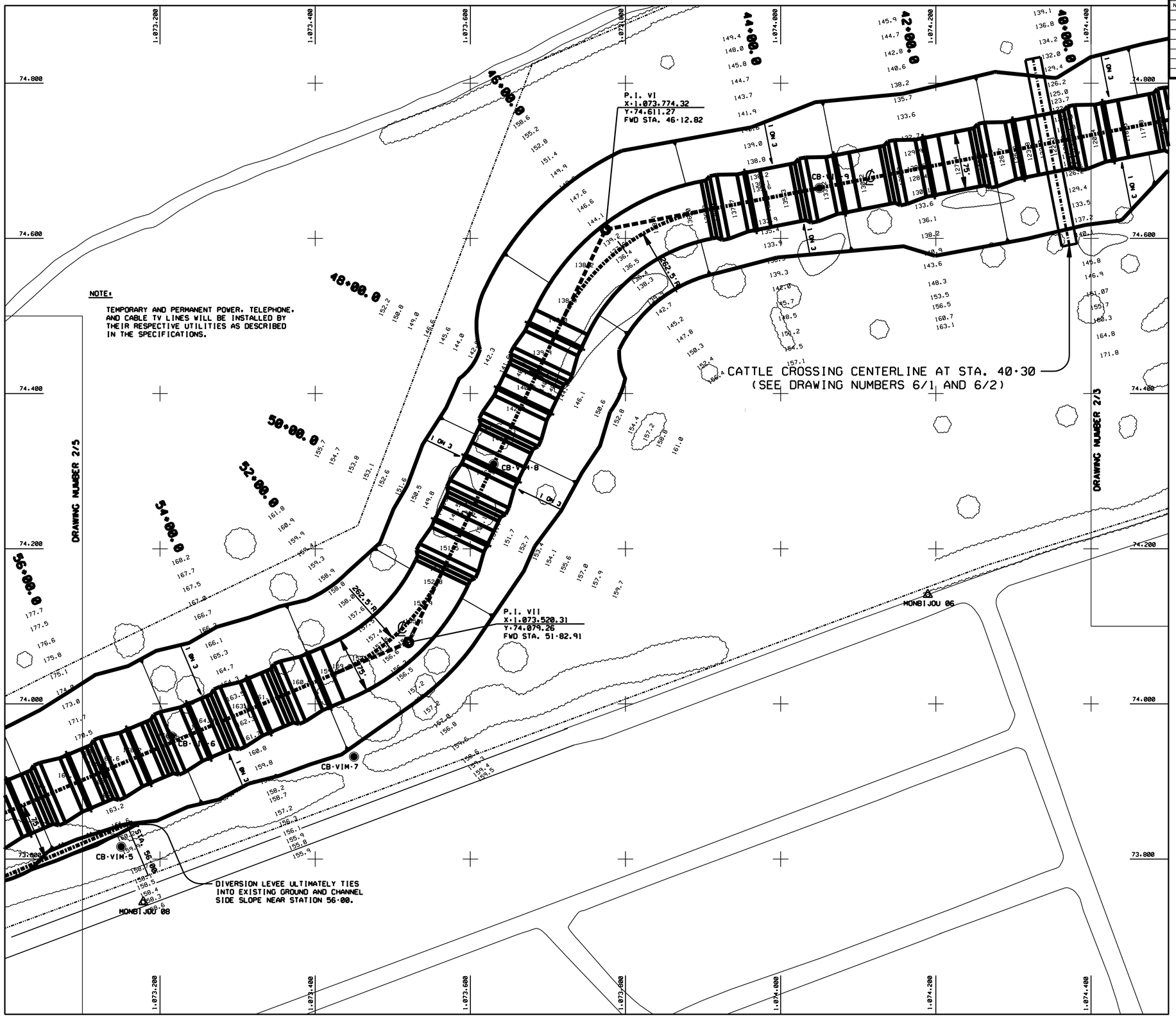

REVISIONS

NO.	SYM.	ZONE	DESCRIPTION	DATE	APPROVED

NOTES:

1. THE LABEL 1 ON 3 INDICATES A SLOPE OF 1 VERTICAL ON 3 HORIZONTAL.
2. THE DROP STRUCTURE AND CHANNEL INVERT ELEVATIONS ARE SHOWN ON DRAWINGS 3/1 THROUGH 3/3.
3. THE DROP STRUCTURE DETAILS ARE SHOWN ON DRAWING 4/1.
4. THE DIVERSION LEVEE TOP ELEVATION SHALL BE AS SHOWN ON DRAWING 3/3 BETWEEN STATIONS 56+00 AND 64+65. TAPER TO 186.18 FEET, NGVD AT STATION 65+30. THEN TAPER TO 190 FEET, NGVD AS SHOWN. THE CHANNEL INVERT EXCLUDES DROP STRUCTURE CRESTS FOR THIS PURPOSE. SEE DRAWING NUMBERS 3/3 AND 4/1.
5. GABIONS AND FILTER CLOTH PLACED ON THE DIVERSION LEVEE SLOPE SHALL BE THE TYPE INDICATED IN THE SPECIFICATIONS. GABIONS SHALL MEASURE 12' X 3' X 1'.
6. GABIONS SHALL BE PLACED ON THE ENTIRE NORTH SLOPE OF THE DIVERSION LEVEE AND SOUTH SLOPE OF THE CHANNEL UPSTREAM OF STATION 63+76; OTHERWISE, THEY SHALL BE PLACED AS INDICATED IN DRAWING 4/1.
7. THE SURVEY LEGEND IS SHOWN ON DRAWING 2/1.

LEGEND

CORE DRILL HOLE

GABION BASKET REVETMENT

GABION DROP STRUCTURE

N

50 25 0 50 100FT

DEPARTMENT OF THE ARMY
JACKSONVILLE DISTRICT, CORPS OF ENGINEERS
JACKSONVILLE, FLORIDA

ESTATE MON BIJOU
ST. CROIX, U.S. VIRGIN ISLANDS

FLOOD CONTROL CHANNEL

CHANNEL
SITE PLAN

DESIGN ENG.:			
DWN. BY	CKD. BY	INV. NO.	SIZE F	DRAWING NO. 2/4
		DATED:		
		SCALE: AS SHOWN	DATED: AUGUST 1993	SHEET OF

D. O. FILE NUMBER 109-36,488

$$USERNAME$$ $$$DGN$$SPECIFICATION$$$$$$ $$$$$$SYTIME$$$$$

.../dms00722/VIMB0204.DGN 03/18/2004 08:28:19 AM

SAFETY ON THIS JOB DEPENDS ON YOU

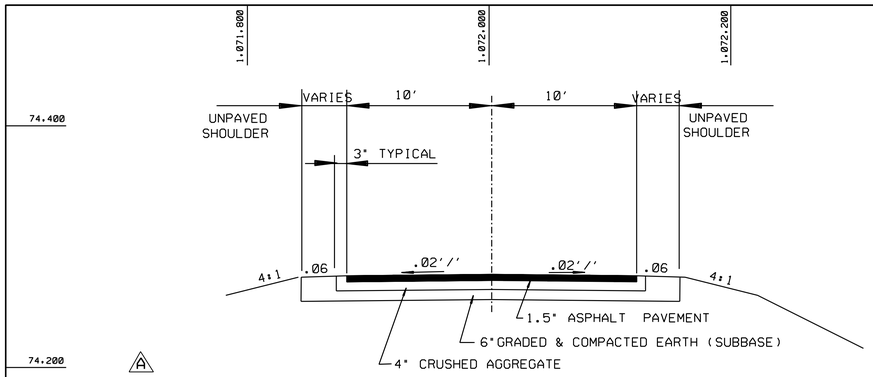

A PROPOSED HY 73 TYPICAL TEMPORARY ROADWAY SECTION

NOTE:

TEMPORARY AND PERMANENT POWER, TELEPHONE, AND CABLE TV LINES WILL BE INSTALLED BY THEIR RESPECTIVE UTILITIES AS DESCRIBED IN THE SPECIFICATIONS.

PROPOSED TEMP HY 73 BY-PASS (40 FT WIDTH) SEE NOTE 9.

RECOMMENDED PERMANENT POWER, TELEPHONE, AND CABLE TV ROUTING (SEE SPECIFICATIONS).

CENTERLINE OF PROPOSED BRIDGE AND APPROACHES (SEE D.O. FILE NUMBER 109-36,491)

DRAWING NUMBER 2/4

UPSTREAM END STA. 65+30

P.I. VIII
X·1,072,200.00
Y·73,521.65
FWD STA. 66+07.31

TIE INTO EXISTING GROUND AT ELEVATION 190 FT. NGVD.

℄ ENDPOINT
X·1,071,980.00
Y·73,440.00

P.I.
X·1,072,176.14
Y·73,424.73

LEVEE

P.I.
X·1,072,302.34
Y·73,478.03

TIE INTO NEW BRIDGE APPROACH.

TIE INTO EXISTING ROAD.

℄ ENDPOINT
X·1,071,806.16
Y·73,355.98

P.I.
X·1,071,958.79
Y·73,406.55

P.I.
X·1,072,270.02
Y·73,382.31

℄ ENDPOINT
X·1,072,428.80
Y·73,449.37

EXISTING POWER, TELEPHONE, AND CABLE TV ROUTING TO BE RELOCATED (SEE SPECIFICATIONS).

RECOMMENDED PERMANENT POWER, TELEPHONE, AND CABLE TV ROUTING (SEE SPECIFICATIONS).

ACCESS ROAD (SEE DWG. NO. 6/4)

56+00.0
58+00.0
60+00.0
62+00.0
64+00.0

STA. 63+26
STA. 63+76
STA. 64+95

CB-VIM-19B
CB-VIM-20B
CB-VIM-2
CB-VIM-21B
CB-VIM-4

HIGHWAY 73
(ESTATE JEWEL ROAD)

HOR BIJOU ROAD

REVISIONS					
NO.	SYM.	ZONE	DESCRIPTION	DATE	APPROVED
3	A	—	REVISED TO CONFORM TO AMENDMENT NO. 0001		

NOTES:

1. THE LABEL 1 ON 3 (OR 2) INDICATES A SLOPE OF 1 VERTICAL ON 3 (OR 2) HORIZONTAL.
2. THE DROP STRUCTURE AND CHANNEL INVERT ELEVATIONS ARE SHOWN ON DRAWINGS 3/1 THROUGH 3/3.
3. THE DROP STRUCTURE DETAILS ARE SHOWN ON DRAWING 4/1.
4. THE DIVERSION LEVEE TOP ELEVATION SHALL BE AS SHOWN ON DRAWING 3/3 BETWEEN STATIONS 56·00 AND 64·65, TAPER TO 186.18 FEET, NGVD AT STATION 65·30, THEN TAPER TO 190 FEET, NGVD AS SHOWN. THE CHANNEL INVERT EXCLUDES DROP STRUCTURE CRESTS FOR THIS PURPOSE. SEE DRAWING NUMBERS 3/3 AND 4/1.
5. GABIONS AND FILTER CLOTH PLACED ON THE DIVERSION LEVEE SLOPE SHALL BE THE TYPE INDICATED IN DRAWING 4/1 AND THE SPECIFICATIONS.
6. GABIONS SHALL BE PLACED ON THE ENTIRE NORTH SLOPE OF THE DIVERSION LEVEE. OTHERWISE, THEY SHALL BE PLACED AS INDICATED IN DRAWING 4/1.
7. THE CHANNEL BOTTOM WIDTH IS 96 FEET AND THE INTERIOR SIDE SLOPES ARE ABOUT 1 VERTICAL ON 2 HORIZONTAL BETWEEN STATIONS 63·76 AND 64·65. THE BOTTOM WIDTH AND SIDE SLOPES TAPER BACK TO 75 FEET AND 1 (V) ON 3 (H) RESPECTIVELY AT EACH END OF THIS REACH. SELECT FILL WILL BE USED IN THIS REACH AS INDICATED IN THE SPECIFICATIONS.
8. THE SURVEY LEGEND IS SHOWN ON DRAWING 2/1.
9. (A) THE CONTRACTOR IS RESPONSIBLE FOR CONSTRUCTING AND MAINTAININGA BYPASS ROAD ON HY 73 FOR LOCAL TRAFFIC USE. THE BYPASS MUST BE CONSTRUCTED AND OPEN FOR TRAFFIC PRIOR TO CLOSING OF HY 73 FOR CHANNEL CONSTRUCTION (THIS CONTRACT) OR BRIDGE CONSTRUCTION (BY OTHERS). THE CONTRACTOR SHALL CONSTRUCT A SUITABLE BYPASS WITHIN THE AVAILABLE RIGHT-OF-WAY. A SUGGESTED 40-FOOT RIGHT-OF-WAY CORRIDOR IS CROSSHATCHED AND SHOWN ON THE DRAWING.

LEGEND

- CORE DRILL HOLE
- GABION BASKET REVETMENT
- GABION DROP STRUCTURE

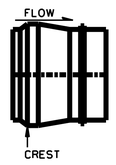

N

50 25 0 50 100FT

DEPARTMENT OF THE ARMY
JACKSONVILLE DISTRICT, CORPS OF ENGINEERS
JACKSONVILLE, FLORIDA

ESTATE MON BIJOU
ST. CROIX, U.S. VIRGIN ISLANDS

FLOOD CONTROL CHANNEL

CHANNEL
SITE PLAN

DESIGN ENG.:					
DWN. BY	CKD. BY	INV. NO.		SIZE F	DRAWING NO. 2/5
		DATED:			
SCALE: AS SHOWN		DATED: AUGUST 1993		SHEET	OF

D. O. FILE NUMBER 109-36,488

$$$$USERNAME$$ $$$$DGNSPECIFICATION$$$$$$$$$$ $$$$$$$$SYSTIME$$$$$$

SAFETY ON THIS JOB DEPENDS ON YOU

REVISIONS					
NO.	SYM.	ZONE	DESCRIPTION	DATE	APPROVED

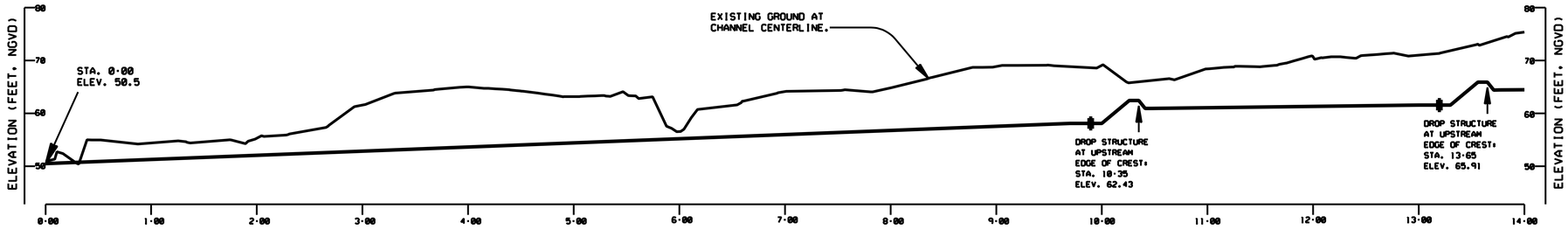

STATIONS 0+00 THROUGH 14+00

SCALES: "A" HORIZONTAL
"B" VERTICAL

NOTES:

1. THE CHANNEL BOTTOM SHALL SLOPE LINEARLY BETWEEN DROP STRUCTURES.
2. THE DROP STRUCTURE DETAILS ARE SHOWN ON DRAWING 4/1.
3. THE PLAN VIEW IS SHOWN ON DRAWINGS 2/1 THROUGH 2/5.

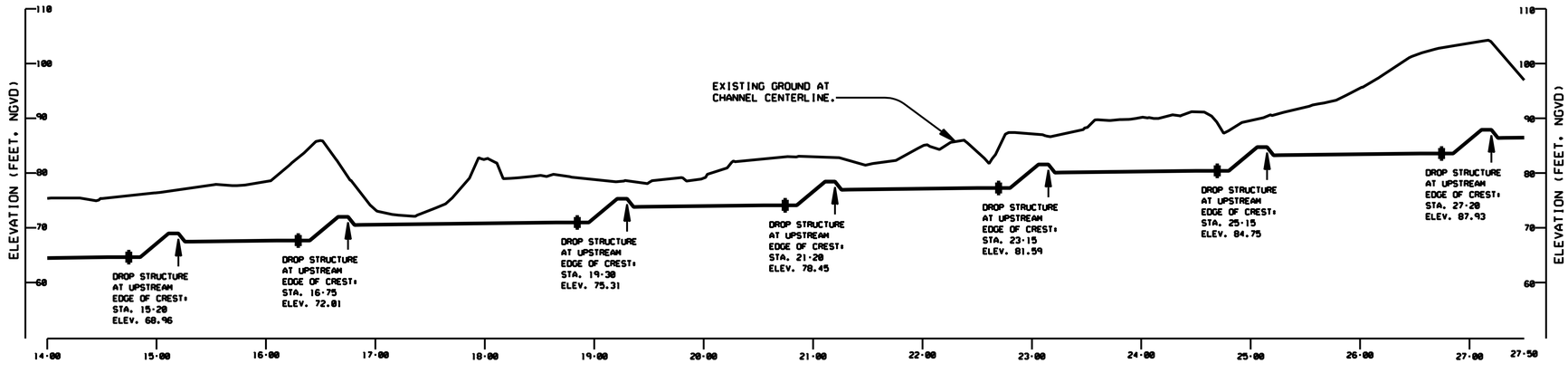

STATIONS 14+00 THROUGH 27+50

SCALES: "A" HORIZONTAL
"B" VERTICAL

GRAPHIC SCALES

"A" 50 25 0 50 100FT

"B" 10 5 0 10 20FT

DEPARTMENT OF THE ARMY
JACKSONVILLE DISTRICT, CORPS OF ENGINEERS
JACKSONVILLE, FLORIDA

ESTATE MON BIJOU
ST. CROIX, U.S. VIRGIN ISLANDS

FLOOD CONTROL CHANNEL

CHANNEL
CENTERLINE PROFILE

DESIGN ENG.:				
DWN. BY	CKD. BY	INV. NO.	SIZE F	DRAWING NO. 3/1
		DATED:		
		SCALE: AS SHOWN	DATED: AUGUST 1993	SHEET OF

D. O. FILE NUMBER 109-36,488

$$USERNAME$$ $$$DGN$$SPECIFICATION$$$$$$ $$$$$$SYTIME$$$$$

.../dms00722/VIMB0301.DGN 03/18/2004 08:28:24 AM

SAFETY ON THIS JOB DEPENDS ON YOU

REVISIONS					
NO.	SYM.	ZONE	DESCRIPTION	DATE	APPROVED

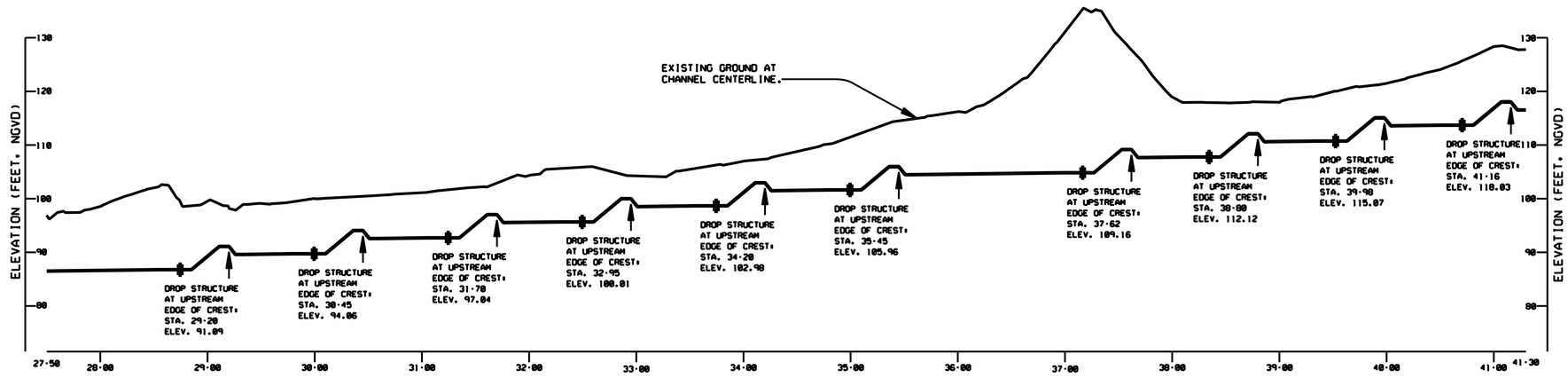

STATIONS 27·50 THROUGH 41·30

SCALES: "A" HORIZONTAL
"B" VERTICAL

NOTES:

1. THE CHANNEL BOTTOM SHALL SLOPE LINEARLY BETWEEN DROP STRUCTURES.
2. THE DROP STRUCTURE DETAILS ARE SHOWN ON DRAWING 4/1.
3. THE PLAN VIEW IS SHOWN ON DRAWINGS 2/1 THROUGH 2/5.

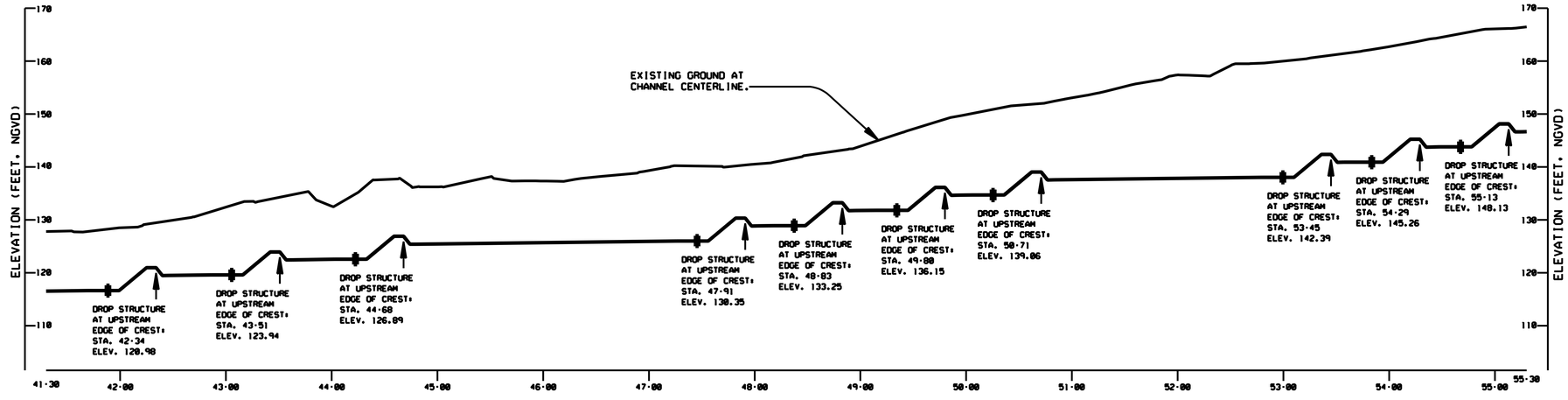

STATIONS 41·30 THROUGH 55·30

SCALES: "A" HORIZONTAL
"B" VERTICAL

GRAPHIC SCALES

"A" 50 25 0 50 100FT

"B" 10 5 0 10 20FT

DEPARTMENT OF THE ARMY
JACKSONVILLE DISTRICT, CORPS OF ENGINEERS
JACKSONVILLE, FLORIDA

ESTATE MON BIJOU
ST. CROIX, U.S. VIRGIN ISLANDS

FLOOD CONTROL CHANNEL

CHANNEL
CENTERLINE PROFILE

DESIGN ENG.:				
DWN. BY	CKD. BY	INV. NO.	SIZE F	DRAWING NO. 3/2
		DATED:		
		SCALE: AS SHOWN	DATED: AUGUST 1993	SHEET OF

D. O. FILE NUMBER 109-36,488

$$USERNAME$$ $$$DGN$$SPECIFICATION$$$$$$ $$$$$$SYTIME$$$$$

.../dms00722/VIMB0302.DGN 03/18/2004 08:28:26 AM

SAFETY ON THIS JOB DEPENDS ON YOU

REVISIONS					
NO.	SYM.	ZONE	DESCRIPTION	DATE	APPROVED

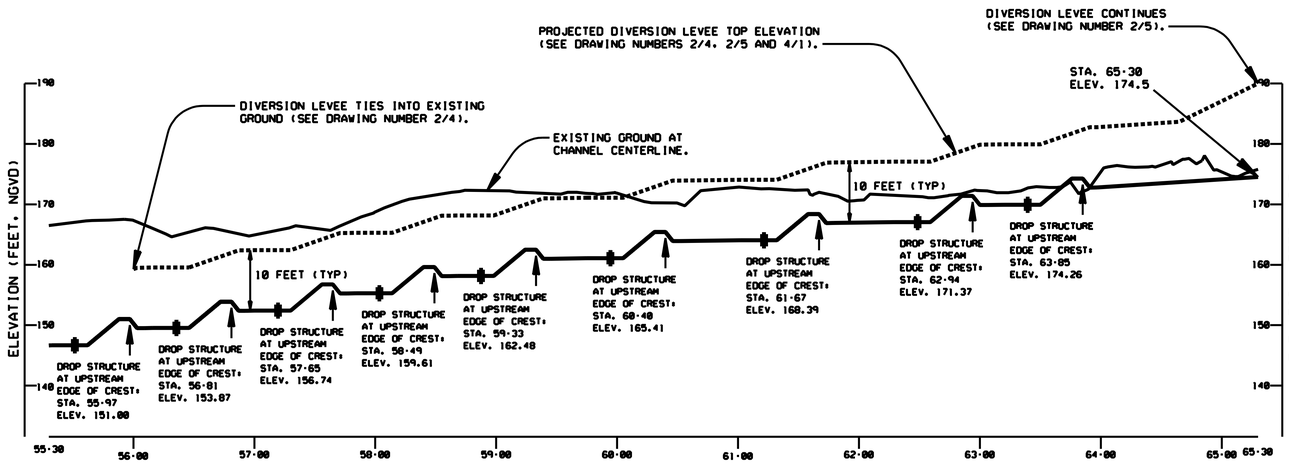

STATIONS 55+30 THROUGH 65+30

SCALES: "A" HORIZONTAL
"B" VERTICAL

NOTES:

1. THE CHANNEL BOTTOM SHALL SLOPE LINEARLY BETWEEN DROP STRUCTURES.
2. THE DROP STRUCTURE DETAILS ARE SHOWN ON DRAWING 4/1.
3. THE PLAN VIEW IS SHOWN ON DRAWINGS 2/1 THROUGH 2/5.

GRAPHIC SCALES

"A" 50 25 0 50 100FT

"B" 10 5 0 10 20FT

DEPARTMENT OF THE ARMY
JACKSONVILLE DISTRICT, CORPS OF ENGINEERS
JACKSONVILLE, FLORIDA

ESTATE MON BIJOU
ST. CROIX, U.S. VIRGIN ISLANDS

FLOOD CONTROL CHANNEL

CHANNEL
CENTERLINE PROFILE

DESIGN ENG.:				
DWN. BY	CKD. BY	INV. NO.	SIZE F	DRAWING NO. 3/3
		DATED:		
		SCALE: AS SHOWN	DATED: AUGUST 1993	SHEET OF

D. O. FILE NUMBER 109-36,488

$$USERNAME$$ $$$DGN$SPECIFICATION$$$$$$ $$$$$$SYTIME$$$$$

.../dms00722/VIMB0303.DGN 03/18/2004 08:28:28 AM

SAFETY ON THIS JOB DEPENDS ON YOU

REVISIONS					
NO.	SYM.	ZONE	DESCRIPTION	DATE	APPROVED
6	A	—	REVISED TO CONFORM TO AMENDMENT NO. 0001		

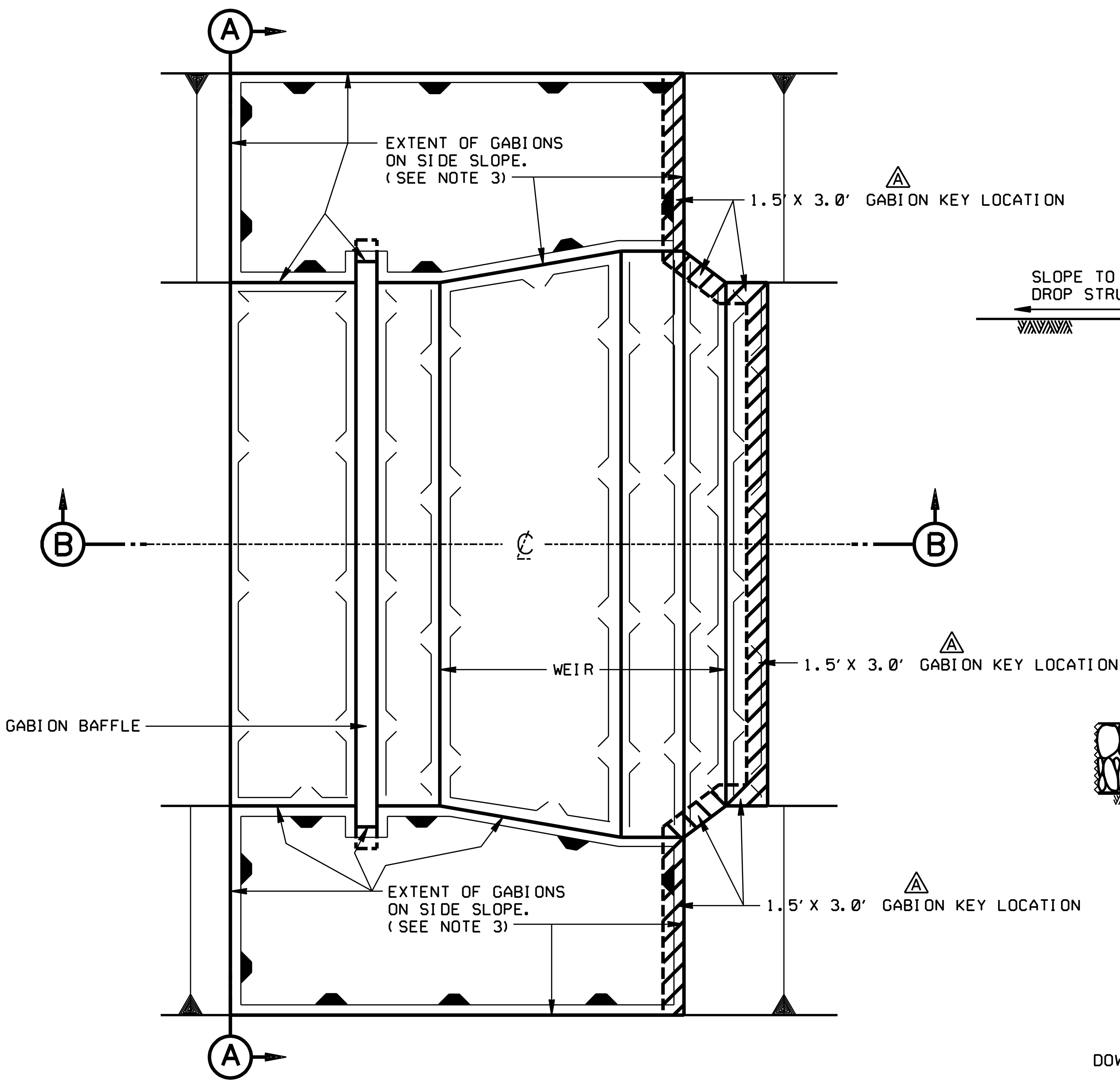

PLAN - TYPICAL DROP STRUCTURE

SCALE "B"

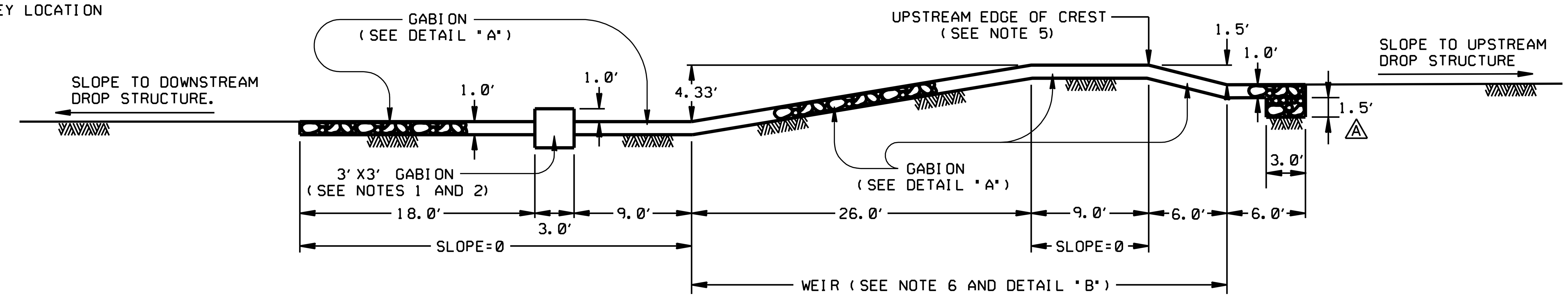

SECTION B-B (TYPICAL)

SCALE "A"

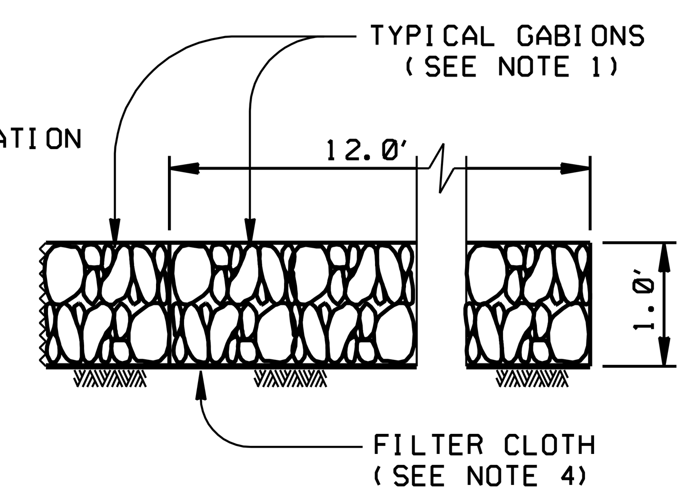

DETAIL "A"

NOT TO SCALE

LEGEND

- GABION REVETMENT
- EXPOSED DROP STRUCTURE GABION

NOTES:

1. THE TYPICAL GABIONS FOR THE DROP STRUCTURES SHALL BE 12' X 3' X 1' EXCEPT FOR THE 3' X 3' GABIONS SHOWN ON SECTION B-B AND THE 12' X 3' X 1.5' GABIONS PLACED BELOW THE UPSTREAM LIMIT OF THE 12' X 3' X 1' GABIONS.
2. GABION BASKETS SHALL BE PLACED WITH THE LONGEST DIMENSION PARALLEL TO THE FLOW EXCEPT FOR THE 3' X 3' GABIONS SHOWN ON SECTION B-B AND THE 12' X 3' X 1.5' GABIONS PLACED BELOW THE UPSTREAM LIMIT OF THE 12' X 3' X 1' GABIONS.
3. GABION REVETMENT ON THE SIDE SLOPES ABOVE THE DROP STRUCTURES SHALL BE PLACED TO 7.5 FEET ABOVE THE CREST. WHEREVER EACH SIDE SLOPE INTERSECTS WITH EXISTING GROUND LESS THAN 7.5 FEET ABOVE THE CREST, GABION REVETMENT SHALL BE PLACED TO THE SLOPE INTERSECT ONLY.
4. FILTER CLOTH SHALL BE PLACED UNDER ALL GABION BASKETS.
5. THE UPSTREAM EDGE OF CREST IS THE REFERENCE POINT FOR THE STATION, ELEVATION AND RELATIVE POSITION OF EACH DROP STRUCTURE IN THESE DRAWINGS.
6. THE CHANNEL BOTTOM SHALL BE CONSIDERED A STRAIGHT LINE RUNNING FROM UPSTREAM BASE TO DOWNSTREAM BASE OF THE WEIR, AS SHOWN IN DETAIL "B", FOR THE PURPOSE OF DETERMINING THE TOES OF SIDE SLOPES, DIVERSION LEVEE TOP ELEVATIONS, AND TYPICAL SECTIONS.
7. THE CHANNEL BOTTOM WIDTH IS 82 FEET BETWEEN STATIONS 26+50 AND 30+60. THE CHANNEL BOTTOM WIDTH AND SIDE SLOPES ALSO TAPER TO 96 FEET, AND 1 VERTICAL ON 2 HORIZONTAL RESPECTIVELY UPSTREAM OF STATION 63+26. THE WEIR AND BAFFLE OF EACH AFFECTED DROP STRUCTURE SHALL EXTEND TO THE SIDE SLOPES.

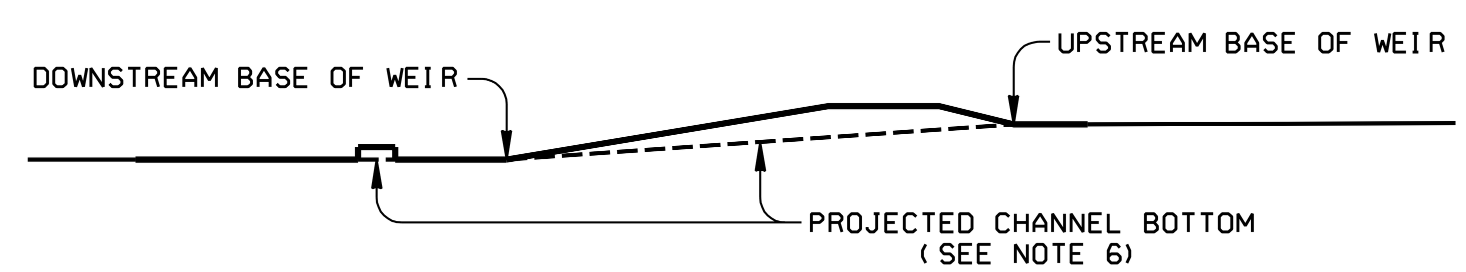

DETAIL "B"

NOT TO SCALE

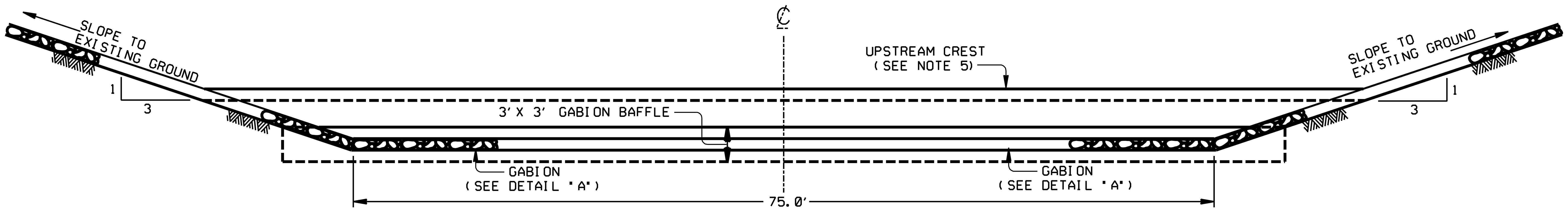

SECTION A-A (TYPICAL)

SCALE "A"

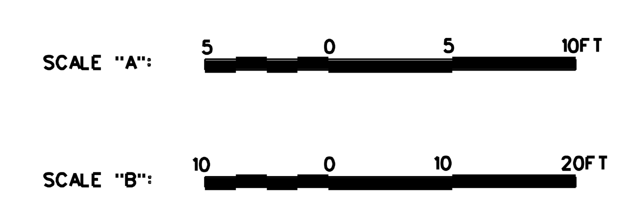

DEPARTMENT OF THE ARMY JACKSONVILLE DISTRICT, CORPS OF ENGINEERS JACKSONVILLE, FLORIDA		
ESTATE MON BIJOU ST. CROIX, U.S. VIRGIN ISLANDS		
FLOOD CONTROL CHANNEL GABION DROP STRUCTURES DETAILS		
DESIGN ENG.:	DWN. BY	CKD. BY
INV. NO. DATED:	SIZE F	DRAWING NO. 4/1
SCALE: AS SHOWN	DATED: AUGUST 1993	SHEET OF

D. O. FILE NUMBER 109-36,488

$$USERNAME$$ $$$DGN$$SPECIFICATION$$$$$$ $$$$$$SYTIME$$$$$

SAFETY ON THIS JOB DEPENDS ON YOU

REVISIONS					
NO.	SYM.	ZONE	DESCRIPTION	DATE	APPROVED

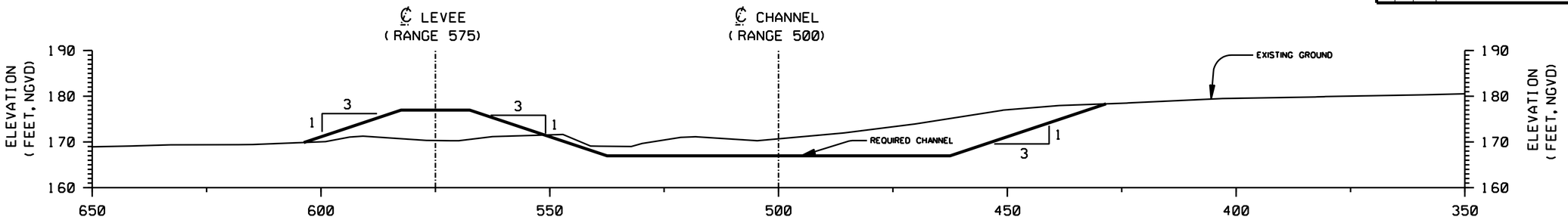

CHANNEL STATION 62+00

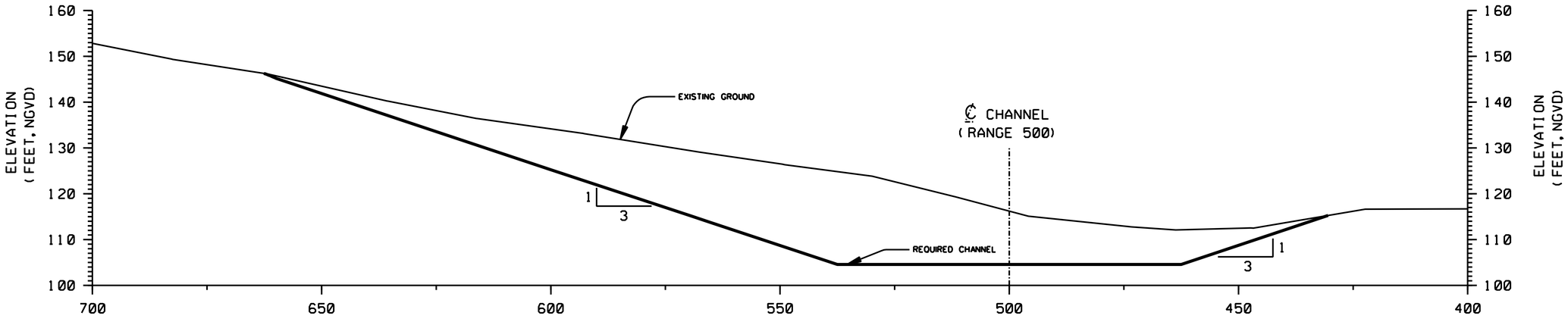

CHANNEL STATION 36+00

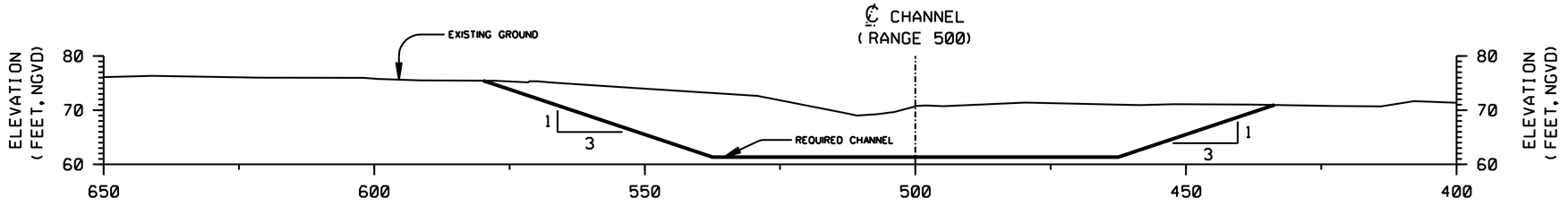

CHANNEL STATION 12+00

NOTES:

1. THE CHANNEL BOTTOM WIDTH IS 75 FEET UNLESS OTHERWISE INDICATED IN THESE DRAWINGS AND D. O. FILE NUMBER 109-36,491.
2. THE LEVEE TOP WIDTH IS 15 FEET.

SCALE: 10 0 10 20FT

DEPARTMENT OF THE ARMY
JACKSONVILLE DISTRICT, CORPS OF ENGINEERS
JACKSONVILLE, FLORIDA

ESTATE MON BIJOU
ST. CROIX, U.S. VIRGIN ISLANDS

FLOOD CONTROL CHANNEL

TYPICAL SECTIONS
CHANNEL SECTIONS

DESIGN ENG.:			
DWN. BY	CKD. BY	INV. NO.	SIZE F	DRAWING NO. 5/1
		DATED:		
		SCALE: AS SHOWN	DATED: AUGUST 1993	SHEET OF

D. O. FILE NUMBER 109-36,488

$$USERNAME$$ $$$DGN$SPECIFICATION$$$$$$ $$$$$$SYTIME$$$$$

.../dms00722/VIMB0501.DGN 03/18/2004 08:28:31 AM

SAFETY ON THIS JOB
DEPENDS ON YOU

REVISIONS					
NO.	SYM.	ZONE	DESCRIPTION	DATE	APPROVED

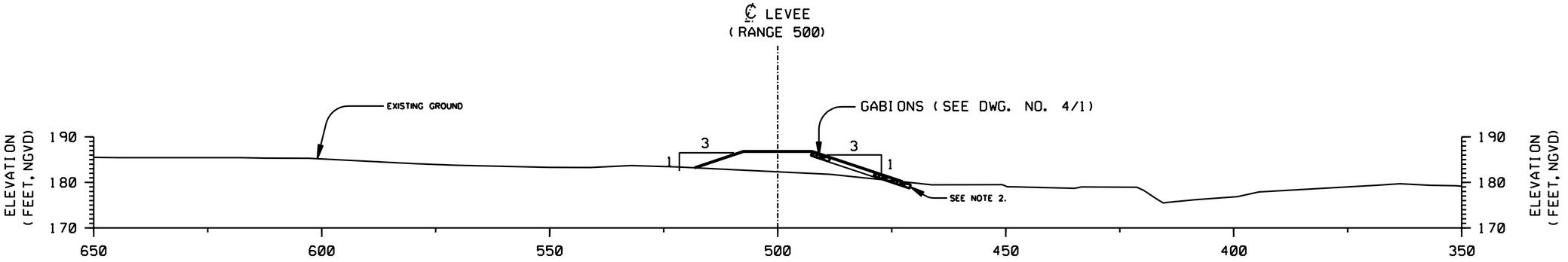

LEVEE STATION 0+50

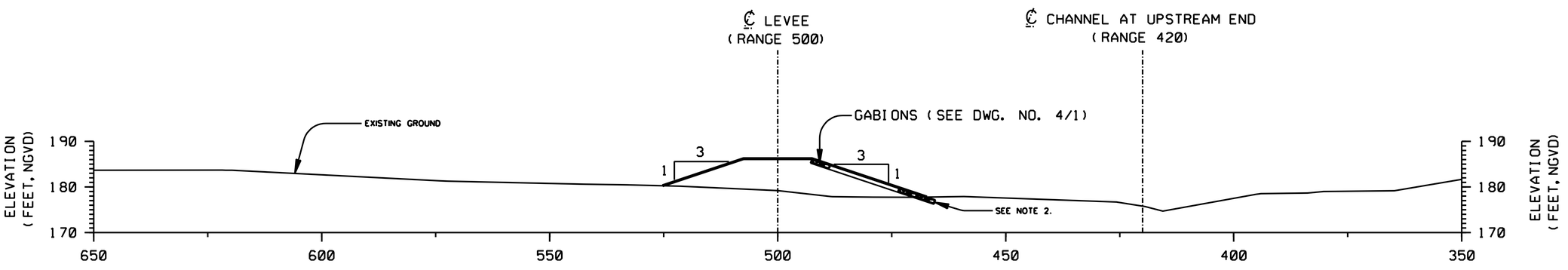

LEVEE STATION 0+00 (CHANNEL STATION 65+30)

NOTES:

1. THE LEVEE TOP WIDTH IS 15 FEET.
2. THE GABION REVETMENT SHALL EXTEND INTO THE GROUND AT LEAST 2 FEET DEEP TO THE TOP OF THE GABION MATTRESS.

SCALE: 10 0 10 20FT

DEPARTMENT OF THE ARMY
JACKSONVILLE DISTRICT, CORPS OF ENGINEERS
JACKSONVILLE, FLORIDA

ESTATE MON BIJOU
ST. CROIX, U.S. VIRGIN ISLANDS

FLOOD CONTROL CHANNEL

TYPICAL SECTIONS
LEVEE SECTIONS

DESIGN ENG.:			
DWN. BY:	CKD. BY:	INV. NO.	SIZE F	DRAWING NO. 5/2
		DATED:		
SCALE: AS SHOWN	DATED: AUGUST 1993	SHEET	OF

D. O. FILE NUMBER 109-36,488

$$USERNAME$$ $$$DGN$$SPECIFICATION$$$$$$ $$$$$$SYTIME$$$$$

.../dms00722/VIMB0502.DGN 03/18/2004 08:28:33 AM

SAFETY ON THIS JOB DEPENDS ON YOU

REVISIONS					
NO.	SYM.	ZONE	DESCRIPTION	DATE	APPROVED

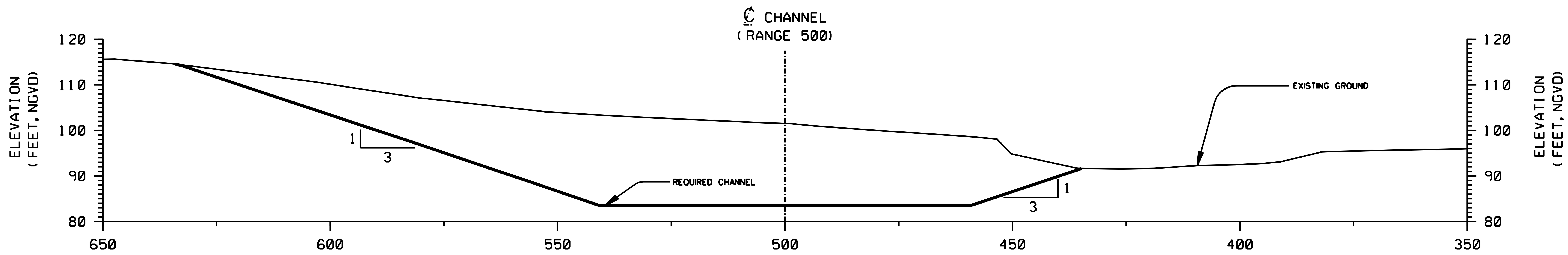

CHANNEL STATION 26+50

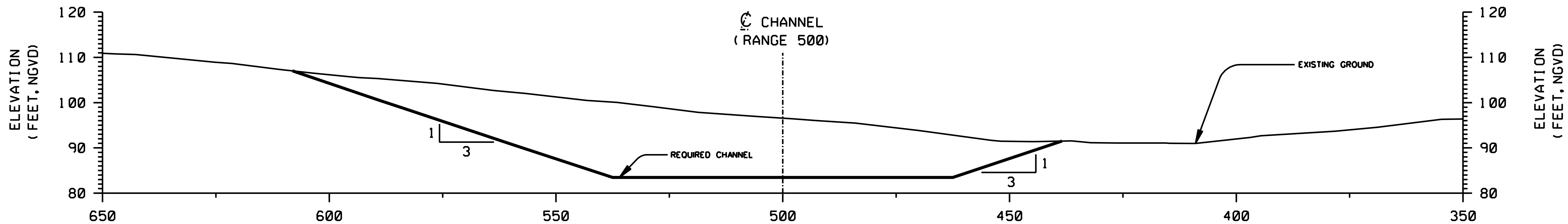

CHANNEL STATION 26+10

NOTE:

1. THE CHANNEL BOTTOM WIDTH IS 75 FEET AT STATION 26+10, AND 82 FEET AT STATION 26+50.

SCALE: 10 0 10 20FT

DEPARTMENT OF THE ARMY
JACKSONVILLE DISTRICT, CORPS OF ENGINEERS
JACKSONVILLE, FLORIDA

ESTATE MON BIJOU
ST. CROIX, U.S. VIRGIN ISLANDS

FLOOD CONTROL CHANNEL

TYPICAL SECTIONS
CHANNEL SECTION TRANSITION

DESIGN ENG.:
DWN. BY | CKD. BY | INV. NO. | SIZE F | DRAWING NO. 5/3
DATED:
SCALE: AS SHOWN | DATED: AUGUST 1993 | SHEET OF

D. O. FILE NUMBER 109-36,488

$$USERNAME$$ $$$DGN$SPECIFICATION$$$$$$ $$$$$$SYTIME$$$$$

.../dms00722/VIMB0503.DGN 03/18/2004 08:28:34 AM

SAFETY ON THIS JOB DEPENDS ON YOU

REVISIONS					
NO.	SYM.	ZONE	DESCRIPTION	DATE	APPROVED

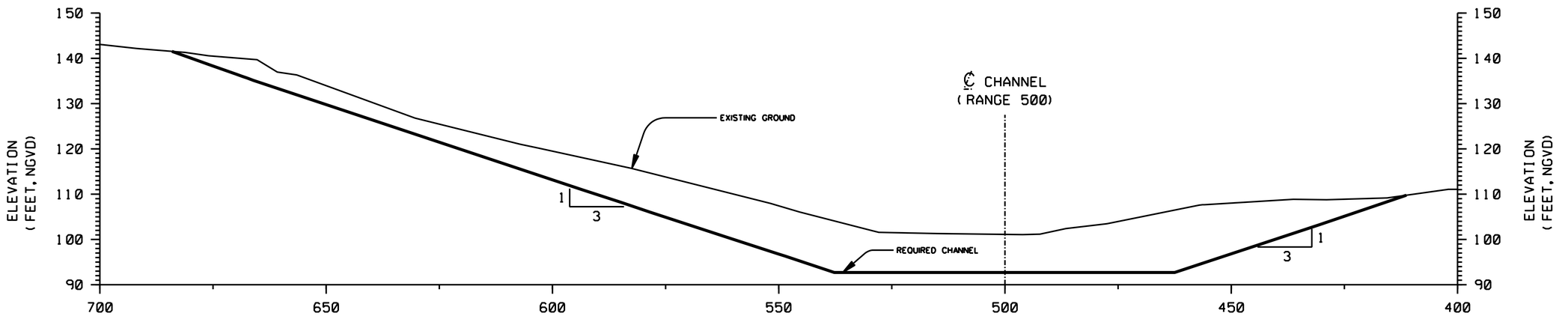

CHANNEL STATION 31+00

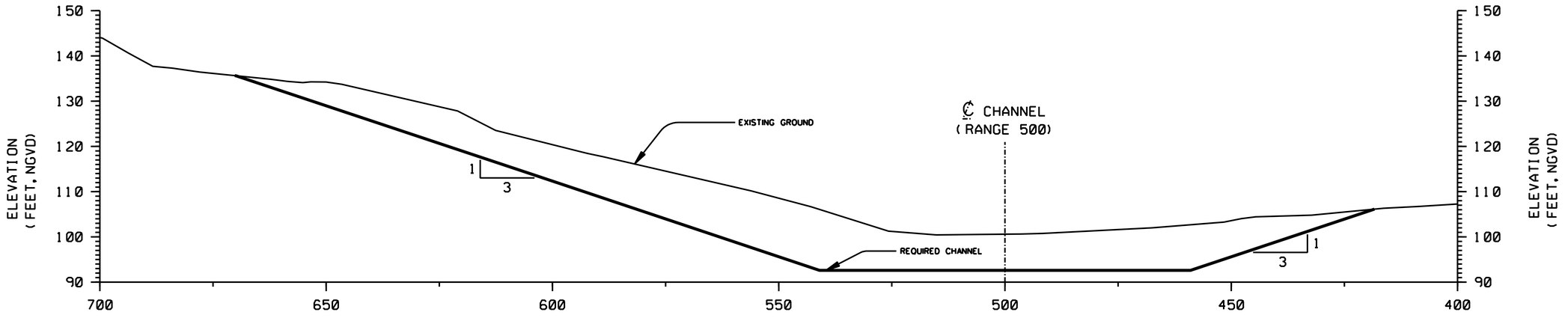

CHANNEL STATION 30+60

NOTE:

1. THE CHANNEL BOTTOM WIDTH IS 82 FEET AT STATION 30+60, AND 75 FEET AT STATION 31+00.

SCALE: 10 0 10 20FT

DEPARTMENT OF THE ARMY
JACKSONVILLE DISTRICT, CORPS OF ENGINEERS
JACKSONVILLE, FLORIDA

ESTATE MON BIJOU
ST. CROIX, U.S. VIRGIN ISLANDS

FLOOD CONTROL CHANNEL

TYPICAL SECTIONS
CHANNEL SECTION TRANSITION

DESIGN ENG.:				
DWN. BY	CKD. BY	INV. NO.	SIZE F	DRAWING NO. 5/4
		DATED:		
		SCALE: AS SHOWN	DATED: AUGUST 1993	SHEET OF

D. O. FILE NUMBER 109-36,488

$$USERNAME$$ $$DESIGNSPECIFICATION$$$$$$$$ $$$$$$$$SYSTIME$$$$$$

.../dms00722/VIM80504.DGN 03/18/2004 08:28:36 AM

SAFETY ON THIS JOB DEPENDS ON YOU

REVISIONS					
NO.	SYM.	ZONE	DESCRIPTION	DATE	APPROVED

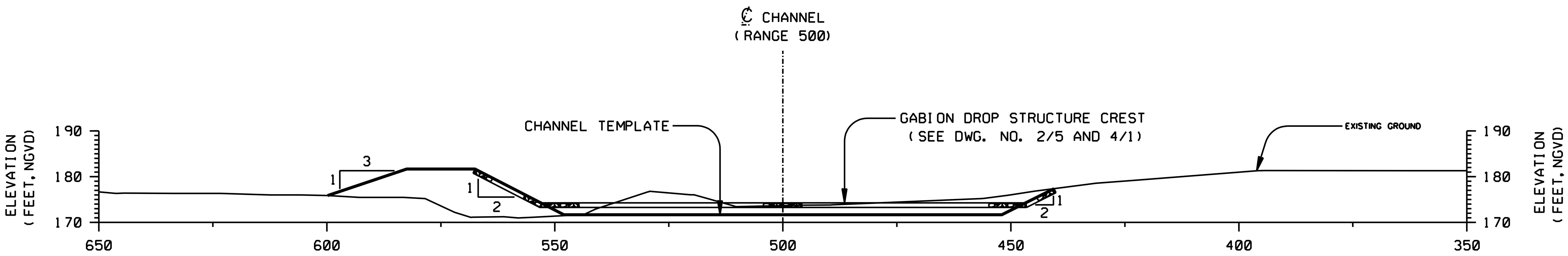

CHANNEL STATION 63+76

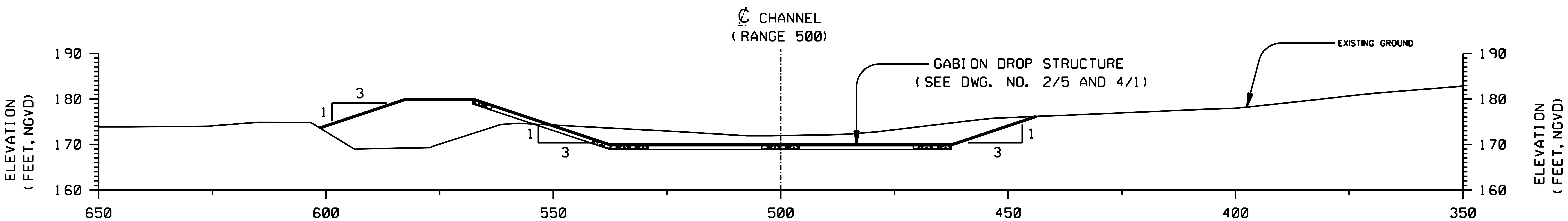

CHANNEL STATION 63+26

NOTES:

1. THE CHANNEL BOTTOM WIDTH IS 75 FEET AT STATION 63+26, AND 96 FEET AT STATION 63+76.

2. THE LEVEE TOP WIDTH IS 15 FEET.

SCALE: 10 0 10 20FT

DEPARTMENT OF THE ARMY
JACKSONVILLE DISTRICT, CORPS OF ENGINEERS
JACKSONVILLE, FLORIDA

ESTATE MON BIJOU
ST. CROIX, U.S. VIRGIN ISLANDS

FLOOD CONTROL CHANNEL

TYPICAL SECTIONS
CHANNEL SECTION TRANSITION

DESIGN ENG.:
DWN. BY | CKD. BY | INV. NO. | SIZE F | DRAWING NO. 5/5
DATED:
SCALE: AS SHOWN | DATED: AUGUST 1993 | SHEET OF

D. O. FILE NUMBER 109-36,488

$$USERNAME$$ $$$DGN$SPECIFICATION$$$$$$ $$$$$$SYTIME$$$$$

.../dms00722/VIMB0505.DGN 03/18/2004 08:28:37 AM

SAFETY ON THIS JOB DEPENDS ON YOU

REVISIONS					
NO.	SYM.	ZONE	DESCRIPTION	DATE	APPROVED

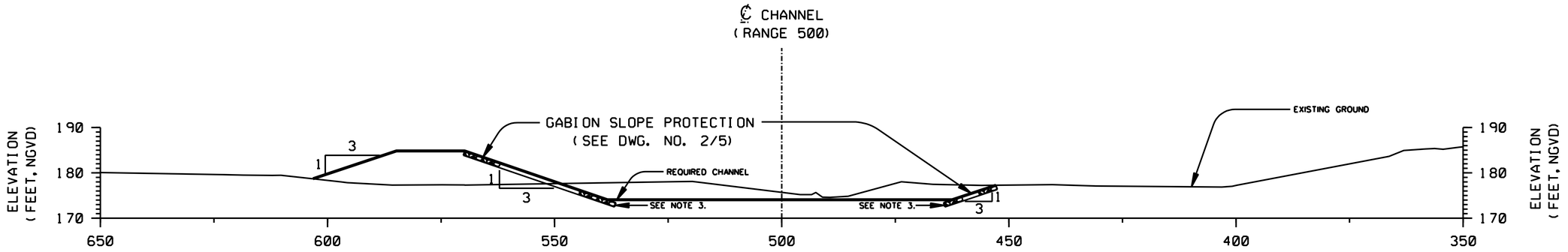

CHANNEL STATION 64+95

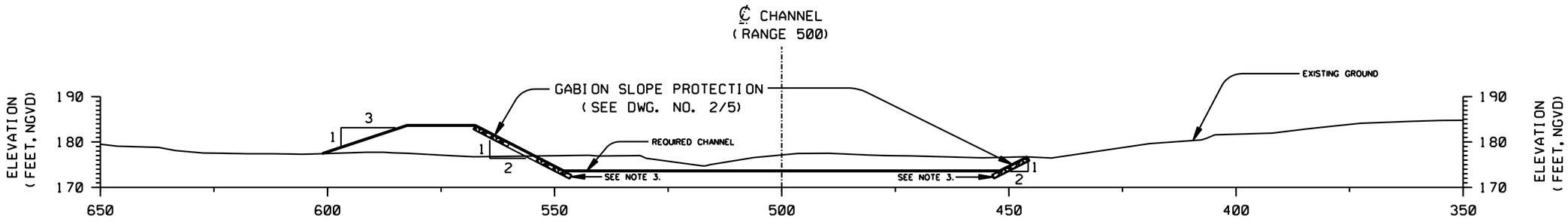

CHANNEL STATION 64+65

NOTES:

1. THE CHANNEL BOTTOM WIDTH IS 96 FEET AT STATION 64+65, AND 75 FEET AT STATION 64+95. THE CHANNEL TAPERS TO EXISTING GROUND FROM STATION 64+95 TO STATION 65+30.
2. THE LEVEE TOP WIDTH IS 15 FEET.
3. THE GABION REVETMENT SHALL EXTEND INTO THE CHANNEL BOTTOM FOR AT LEAST 2 FEET ALONG THE SURFACE OF THE GABIONS.

SCALE: 10 0 10 20FT

DEPARTMENT OF THE ARMY
JACKSONVILLE DISTRICT, CORPS OF ENGINEERS
JACKSONVILLE, FLORIDA

ESTATE MON BIJOU
ST. CROIX, U.S. VIRGIN ISLANDS

FLOOD CONTROL CHANNEL

TYPICAL SECTIONS
CHANNEL SECTION TRANSITION

DESIGN ENG.:					
DWN. BY	CKD. BY	INV. NO.		SIZE F	DRAWING NO. 5/6
		DATED:			
SCALE: AS SHOWN		DATED: AUGUST 1993		SHEET	OF

D. O. FILE NUMBER 109-36,488

$$USERNAME$$ $$DGNDESCRIPTION$$ $$SYTIME$$

.../dms00722/VIM80506.DGN 03/18/2004 08:28:39 AM

SAFETY ON THIS JOB
DEPENDS ON YOU

REVISIONS					
NO.	SYM.	ZONE	DESCRIPTION	DATE	APPROVED

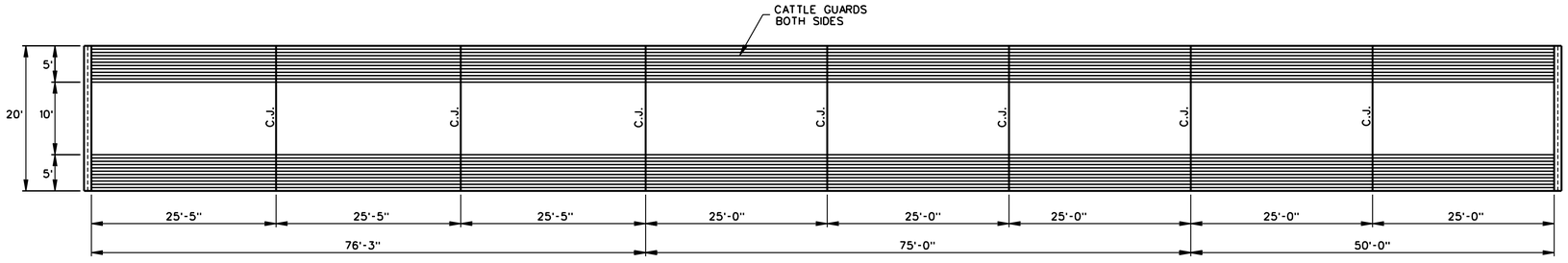

CATTLE CROSSING - PLAN

SCALE: "A"

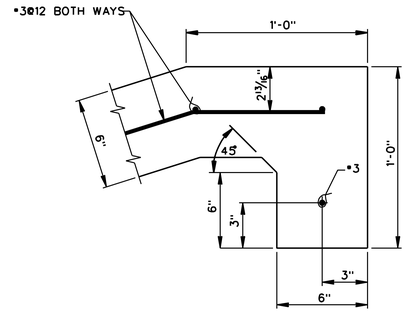

TYPICAL END DETAIL

SCALE: "B"

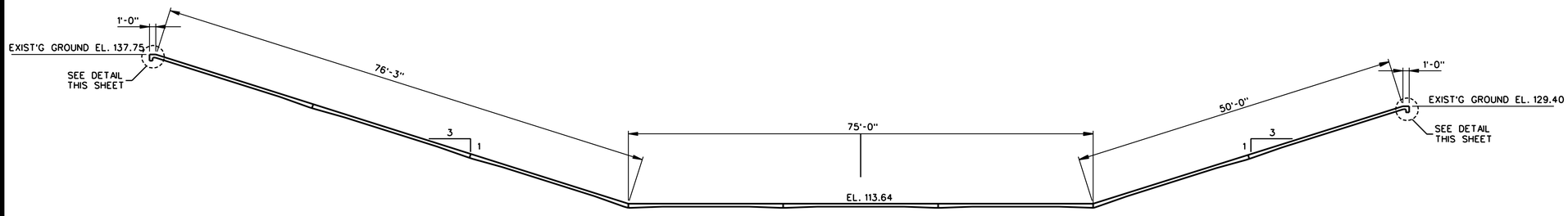

SECTION ALONG CENTERLINE OF CROSSING

SCALE: "A"

NOTE: SEE DRAWING 2/4 FOR LOCATION OF CATTLE CROSSING.

GRAPHIC SCALES:

SCALE: "A" 12"0 5' 10' 15' 20'

SCALE: "B" 0 3" 6" 12"

DEPARTMENT OF THE ARMY
JACKSONVILLE DISTRICT, CORPS OF ENGINEERS
JACKSONVILLE, FLORIDA

ESTATE MON BIJOU
ST. CROIX, U.S. VIRGIN ISLANDS

FLOOD CONTROL CHANNEL

MISCELLANEOUS AND OPS ITEMS
CATTLE CROSSING PLAN AND SECTION

DESIGN ENG.: S.E.R.			
DWN. BY: R.L.H.	CKD. BY: S.E.R.	INV. NO.	SIZE F / DRAWING NO. 6/1
		DATED:	
SCALE: AS SHOWN		DATED: AUGUST 1993	SHEET OF

D.O.FILE NO. 109-36,488

$$USERNAME$$ $$$$DOMSPECIFICATION$$$$$$$$$$ $$$$$$$$SYTIME$$$$$$

.../dms00722/VIMB0601.DGN 03/18/2004 08:28:40 AM

SAFETY ON THIS JOB DEPENDS ON YOU

REVISIONS					
NO.	SYM.	ZONE	DESCRIPTION	DATE	APPROVED

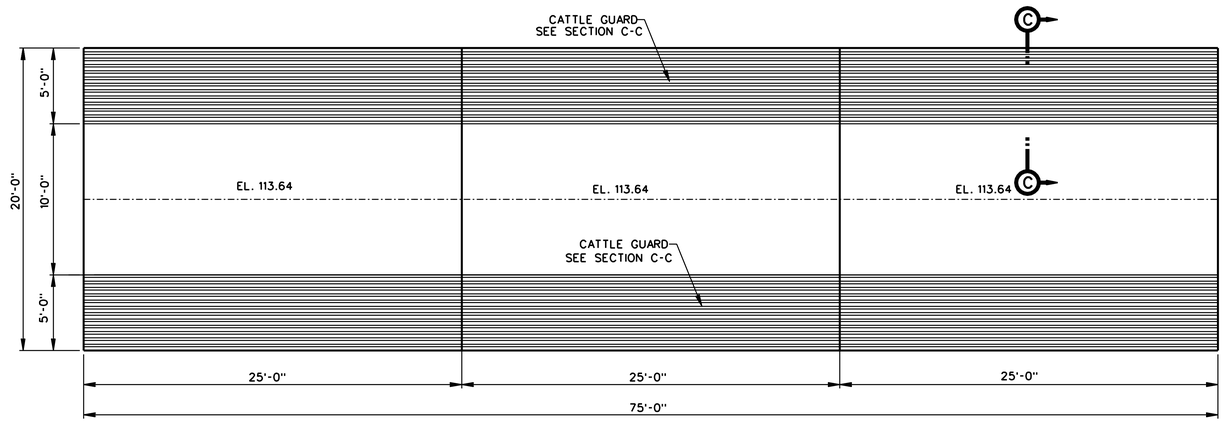

PLAN
SCALE: "A"

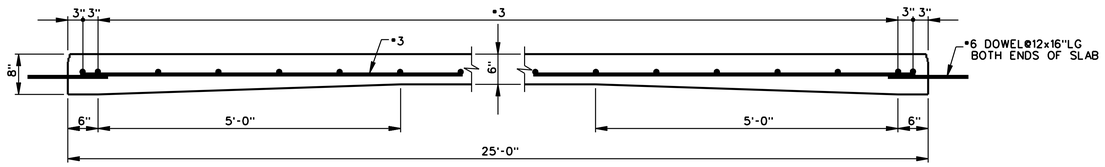

SECTION A-A (TYP)
SCALE: "C"

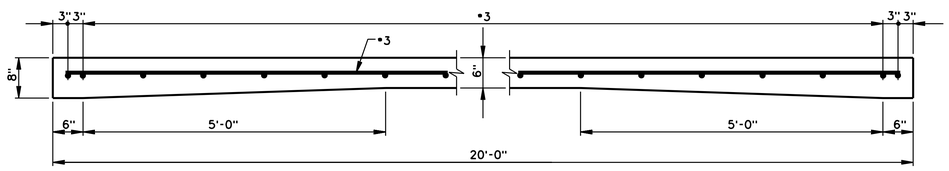

SECTION B-B (TYP)
SCALE: "C"

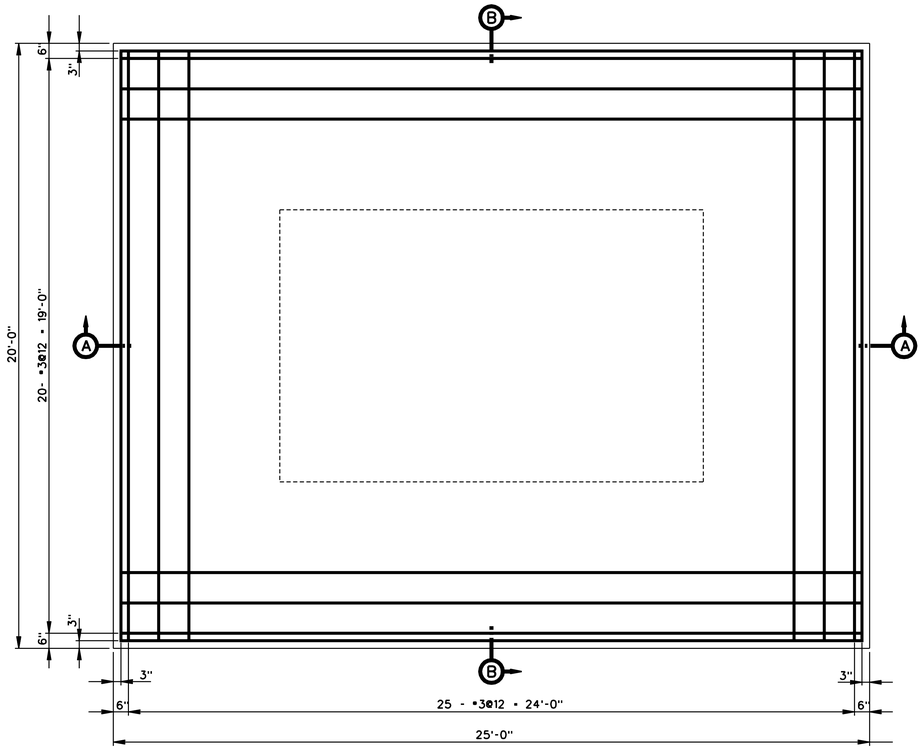

TYPICAL REINFORCEMENT PLAN
SCALE: "B"

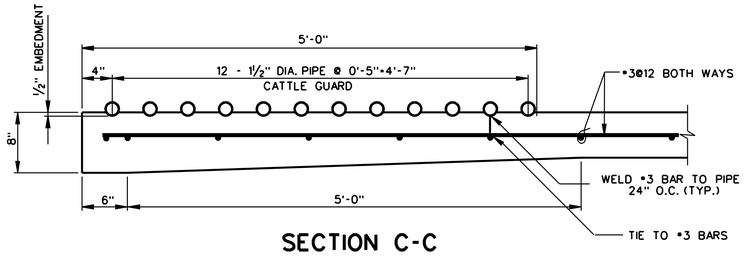

SECTION C-C
SCALE: "E"

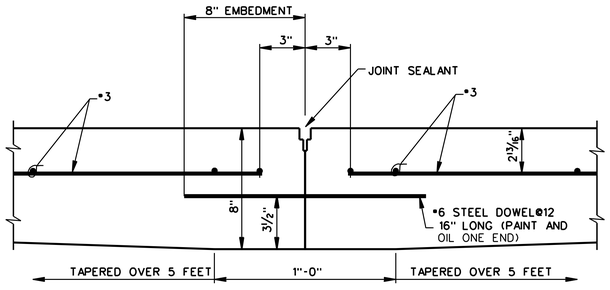

BUTT JOINT DETAIL
SCALE: "D"

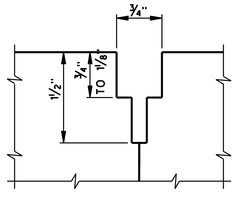

CONSTRUCTION JOINT DETAIL
SCALE: FULL

NOTE: SEE DRAWING 2/4 FOR LOCATION OF CATTLE CROSSING.

GRAPHIC SCALES:

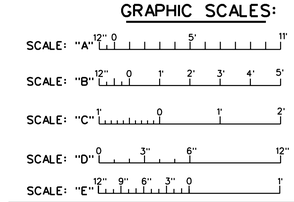

DEPARTMENT OF THE ARMY
JACKSONVILLE DISTRICT, CORPS OF ENGINEERS
JACKSONVILLE, FLORIDA

ESTATE MON BIJOU
ST. CROIX, U.S. VIRGIN ISLANDS

FLOOD CONTROL CHANNEL

MISCELLANEOUS AND OPS ITEMS
CATTLE CROSSING DETAILS

DESIGN ENG.: S.E.R.				
DWN. BY R.L.H.	CKD. BY S.E.R.	INV. NO. DATED:	SIZE F	DRAWING NO. 6/2
		SCALE: AS SHOWN	DATED: AUGUST 1993	SHEET OF

D.O.FILE NO. 109-36,488

$$USERNAME$$ $$$DGN$$SPECIFICATION$$$$$$ $$$$$$SYTIME$$$$$

.../dms00722/VIMB0602.DGN 03/18/2004 08:28:45 AM

SAFETY ON THIS JOB
DEPENDS ON YOU

REVISIONS					
NO.	SYM.	ZONE	DESCRIPTION	DATE	APPROVED

NOT IN CONTRACT

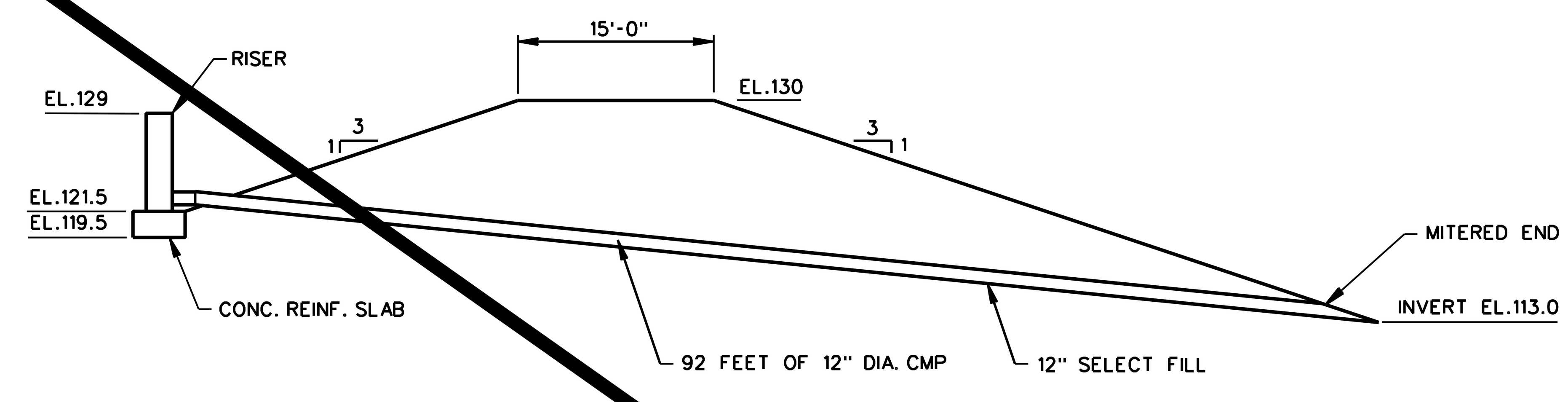

PROFILE
N.T.S.

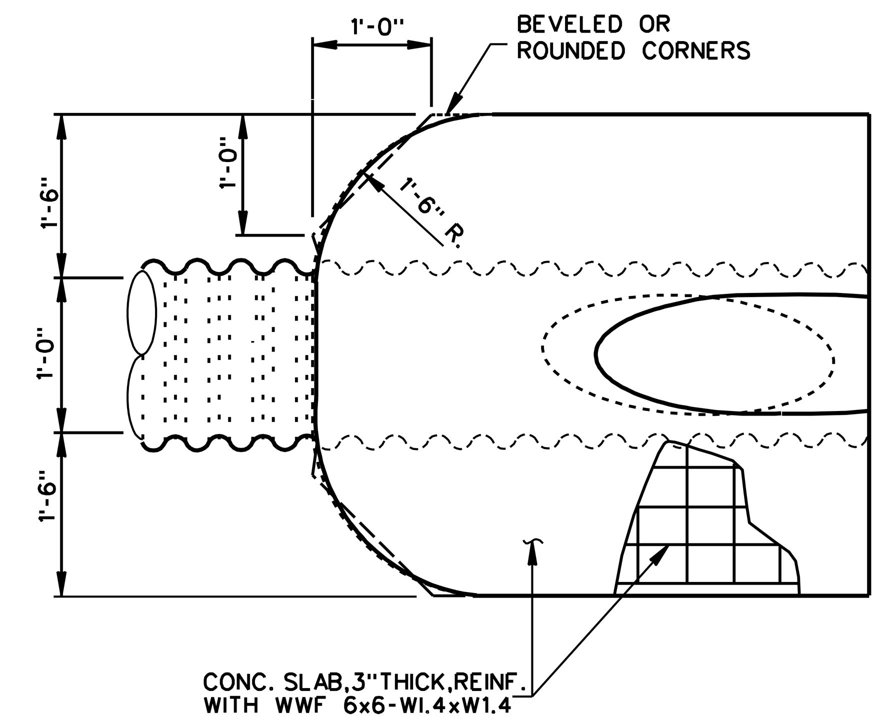

TOP VIEW

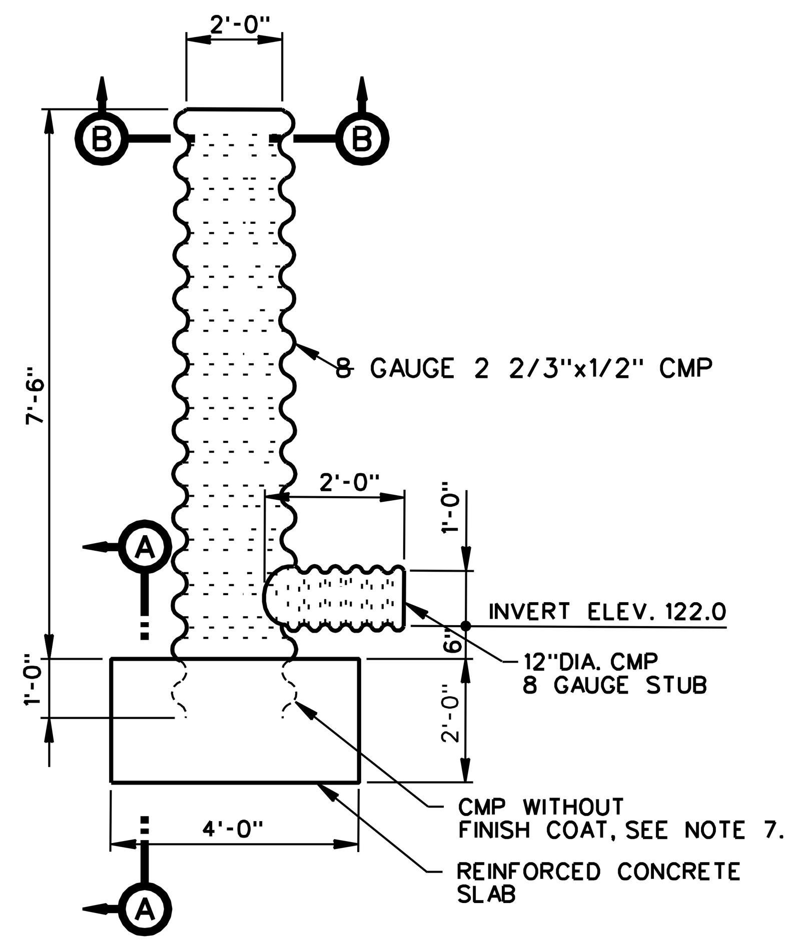

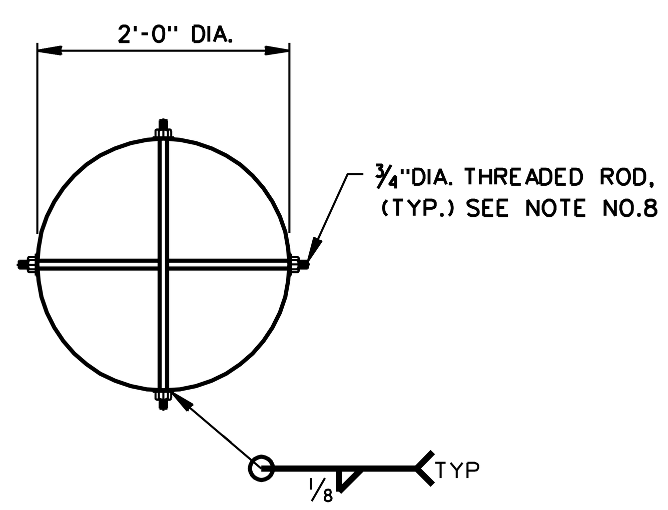

SECTION B-B

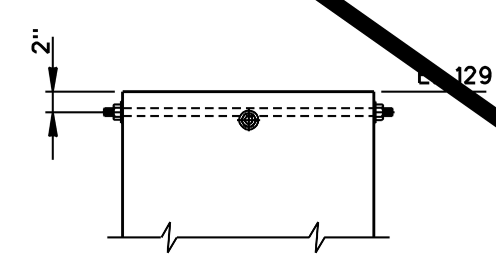

TOP OF RISER

RISER ELEVATION
SCALE: "A"

RISER DEBRIS SCREEN
SCALE: "B"

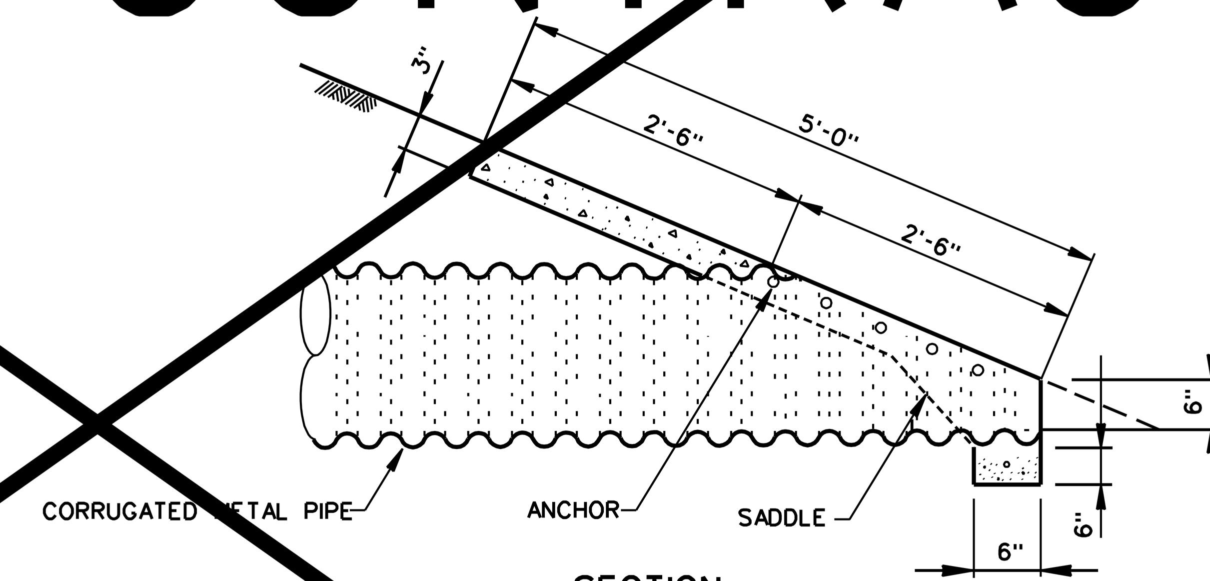

SECTION

MITERED END DETAIL
N.T.S.

NOTES:

1. FOR LOCATION OF RISER AND CULVERT SEE DRAWING NUMBER 2/3.
2. CONCRETE 28 DAY STRENGTH FOR CAST-IN-PLACE BASE AND MITERED END SECTION SHALL BE 3000 P.S.I.
3. REINFORCEMENT SHALL BE GRADE 60.
4. 12 INCHES OF SELECT FILL SHALL BE USED AS BEDDING FOR THE CULVERT. FILL SHALL BE COMPACTED UNDER THE HAUNCHES OF THE CULVERT IN THE FIRST STAGES OF FILLING.
5. CONNECTION BETWEEN THE 2' DIA. CMP AND 1' DIA. CMP SHALL BE AS RECOMMENDED BY THE MANUFACTURER, WELDED AND AS STRONG AS THE 2' DIA.CMP.
6. CULVERT AND RISER PIPE AND CONNECTING BANDS MATERIAL SHALL CONFORM TO ASTM A 885, FABRICATED IN ACCORDANCE WITH AASHTO M36, TYPE I, WITH A FINISH COATING CONFORMING TO AASHTO M 190, TYPE C. CULVERT AND RISER PIPE SHALL BE 8 GAUGE WITH 2 2/3"x1/2" CORRUGATIONS.
7. RISER CMP EXTENDING INTO SLAB SHALL NOT HAVE FINISH COAT.
8. THREADED ROD, NUTS, AND WASHERS FOR DEBRIS SCREEN SHALL BE HOT-DIPPED GALVANIZED.
9. EIGHT HOLES, NO LARGER THAN 1.5" DIAMETER, SHALL BE DRILLED INTO THE EMBEDDED PORTION OF THE RISER CULVERT TO ALLOW INSTALLATION OF THE TOP REINFORCEMENT.

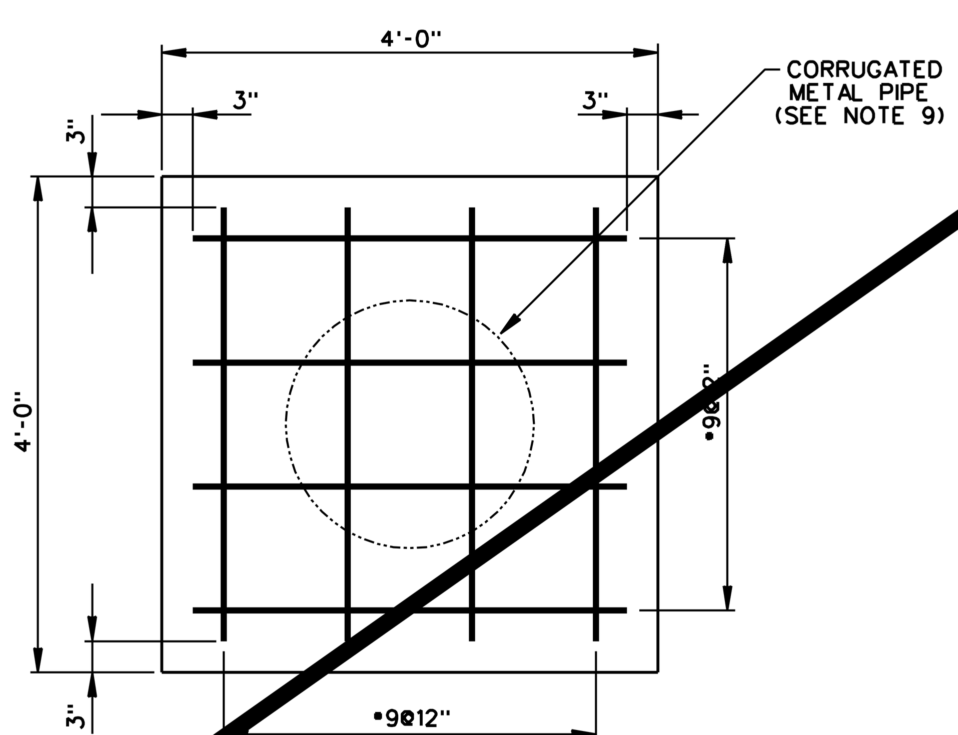

TOP REINFORCEMENT
SCALE: "B"

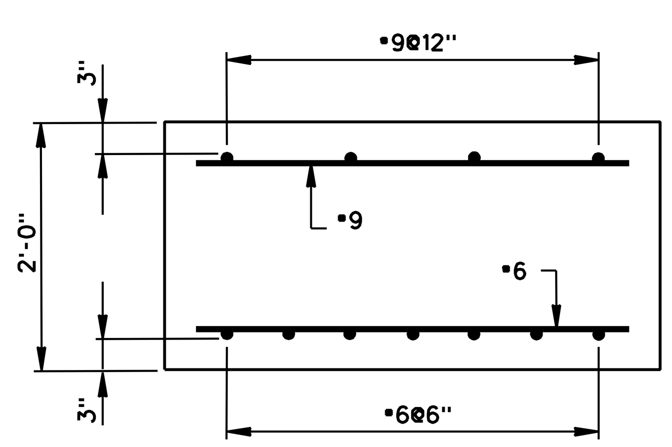

SECTION A-A

SLAB REINFORCEMENT
SCALE: "B"

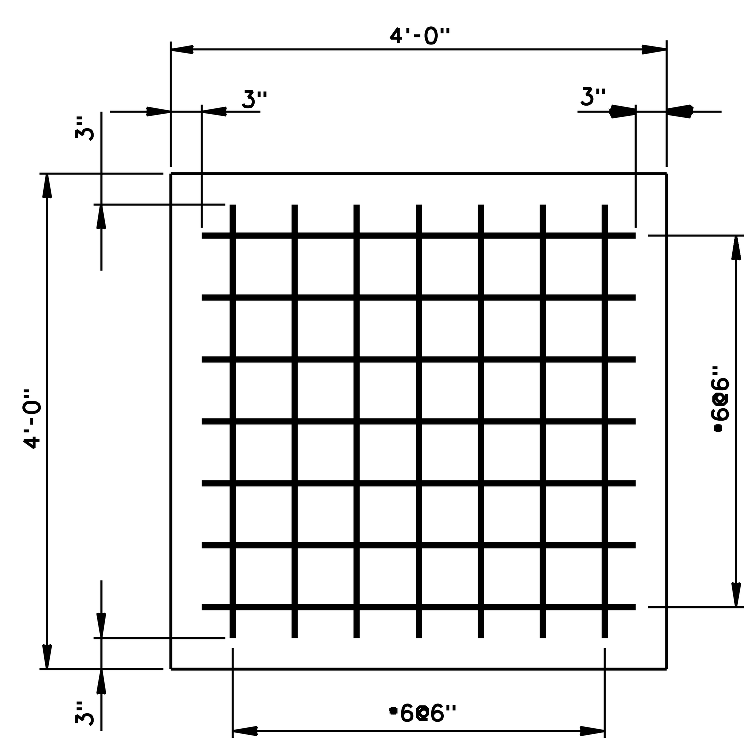

BOTTOM REINFORCEMENT
SCALE: "B"

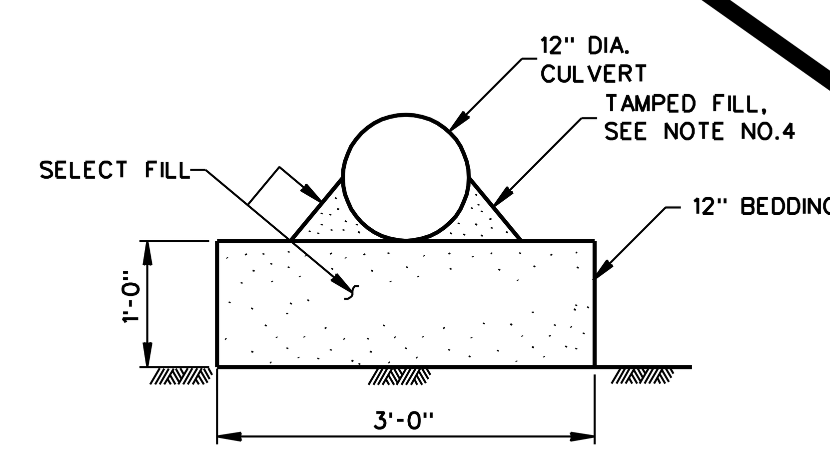

PIPE INSTALLATION DETAIL
SCALE: "B"

GRAPHIC SCALE

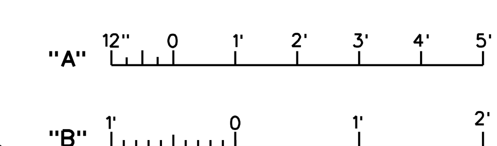

DEPARTMENT OF THE ARMY
JACKSONVILLE DISTRICT, CORPS OF ENGINEERS
JACKSONVILLE, FLORIDA

ESTATE MON BIJOU
ST.CROIX, U.S. VIRGIN ISLANDS

FLOOD CONTROL CHANNEL

MISCELLANEOUS AND OPS ITEMS
CULVERT AND RISER DETAILS

DESIGN ENG.: J.R.F.		INV. NO.	SIZE	DRAWING NO.
DWN. BY C.L.K.	CKD. BY	DATED:	F	6/3
		SCALE: AS SHOWN	DATED: AUGUST 1993	SHEET OF

D.O.FILE NO. 109-36,488

$$USERNAME$$ $$$DGN$$SPECIFICATION$$$$$$ $$$$$$SYTIME$$$$$

.../dms00722/VIMB0603.DGN 03/18/2004 08:28:47 AM

SAFETY ON THIS JOB DEPENDS ON YOU

REVISIONS					
NO.	SYM.	ZONE	DESCRIPTION	DATE	APPROVED

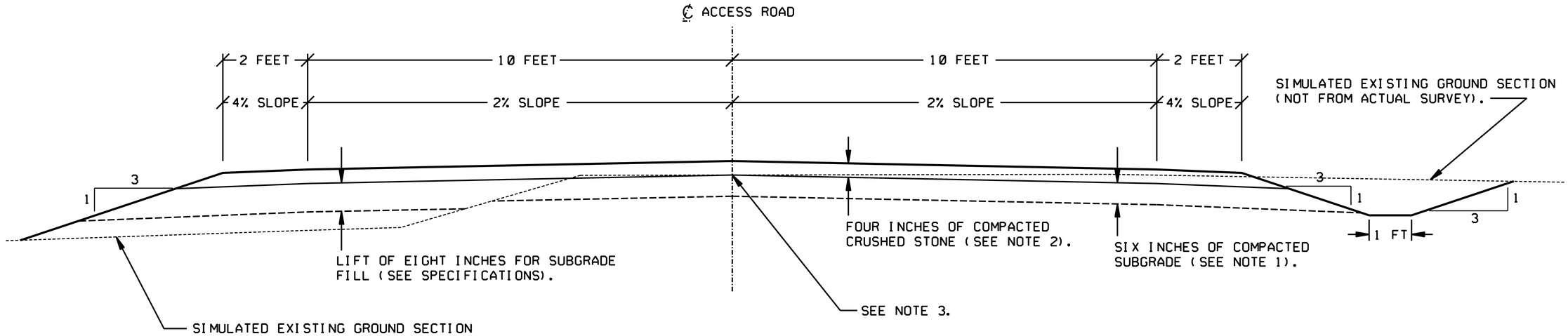

TYPICAL SECTION FOR ACCESS ROADS

NOTES:

1. THE SUBGRADE SHALL BE COMPACTED TO A DEPTH OF AT LEAST SIX INCHES AND AS INDICATED IN THE SPECIFICATIONS.
2. THE CRUSHED STONE SHALL BE COMPACTED TO NO LESS THAN FOUR INCHES THICK AND AS INDICATED IN THE SPECIFICATIONS.
3. THE SUBGRADE CENTERLINE PROFILES SHALL FOLLOW EXISTING GROUND ELEVATIONS AND SHALL DEVIATE ONLY TO PROVIDE A SMOOTH TRANSITION BETWEEN THE CONNECTED ROADS.
4. SEE DRAWING NUMBERS 2/2 AND 2/5 FOR THE ALIGNMENTS OF THE ACCESS ROADS.

SCALE: 1 0 1 2FT

DEPARTMENT OF THE ARMY
JACKSONVILLE DISTRICT, CORPS OF ENGINEERS
JACKSONVILLE, FLORIDA

ESTATE MON BIJOU
ST. CROIX, U.S. VIRGIN ISLANDS

FLOOD CONTROL CHANNEL

MISCELLANEOUS AND OPS ITEMS
TYPICAL SECTION OF ACCESS ROADS

DESIGN ENG.:				
DWN. BY	CKD. BY	INV. NO.	SIZE F	DRAWING NO. 6/4
		DATED:		
		SCALE: AS SHOWN	DATED: AUGUST 1993	SHEET OF

D. O. FILE NUMBER 109-36,488

$$USERNAME$$ $$DGNSPECIFICATION$$$$$$$$ $$$$$$$$TIME$$$$$

.../dms00722/VIMB0604.DGN 03/18/2004 08:28:49 AM

SAFETY ON THIS JOB DEPENDS ON YOU

REVISIONS					
NO.	SYM.	ZONE	DESCRIPTION	DATE	APPROVED

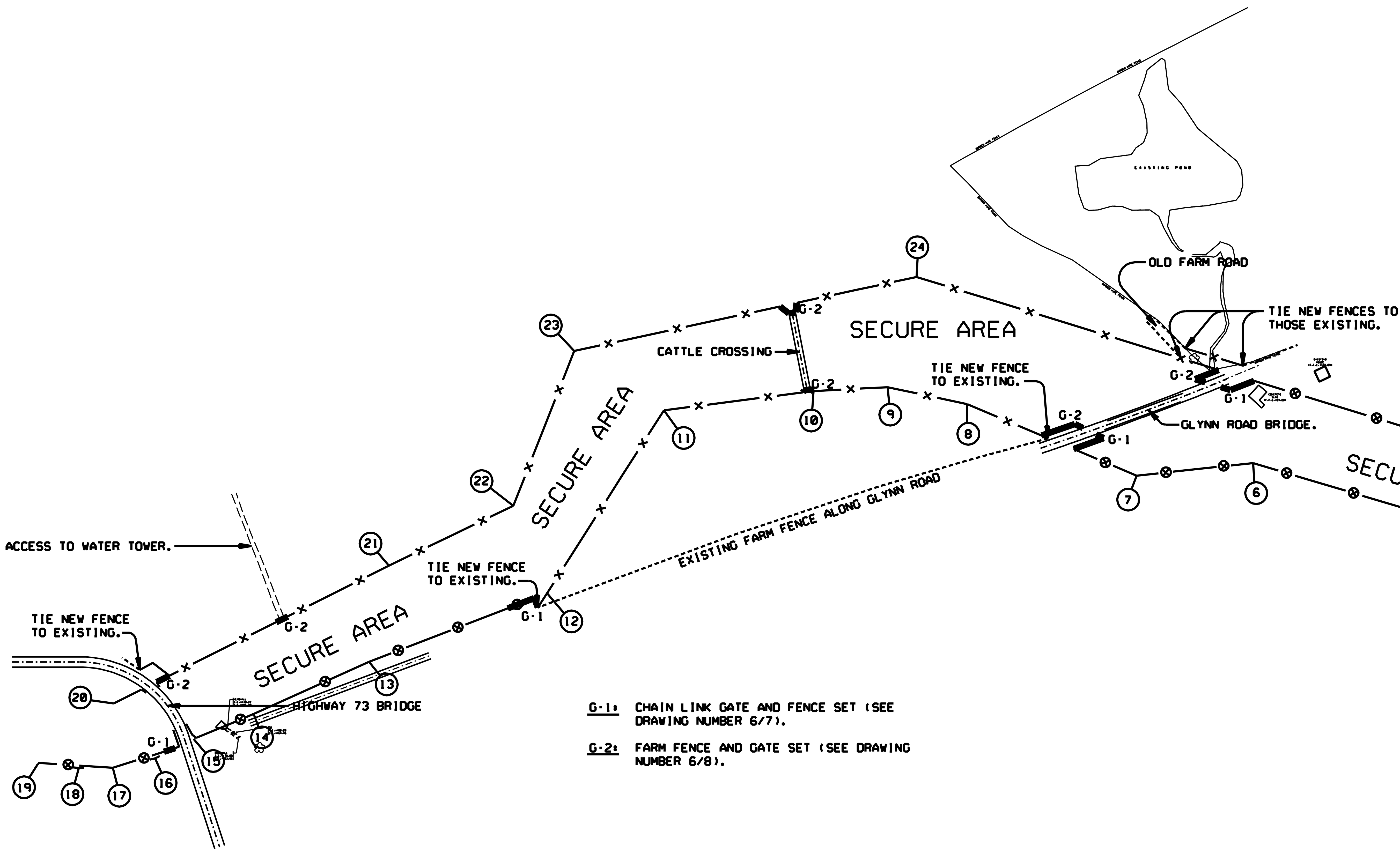

NOTES:

1. THE PERMANENT FENCES WILL BE INSTALLED UPON COMPLETION OF ALL OTHER CONSTRUCTION, AND REMOVAL OF THE TEMPORARY FENCES.
2. THE EXACT LOCATION OF THE GATES WILL BE DETERMINED BY THE CONTRACTING OFFICER'S REPRESENTATIVE.
3. THE FENCES WILL BE PLACED ON THE CHANNEL SITE, JUST INSIDE THE FENCE LINE, AS SHOWN ON THIS SHEET.
4. THE FENCES WILL TIE INTO THE CONCRETE GUARD RAILS AT THE BRIDGES.
5. THE "SECURE AREA" ON THIS DRAWING IS REFERRED TO AS "AREA TO BE PROTECTED" OR "SECURE AREA" ON DRAWING NUMBERS 6/6 AND 6/8.

G-1: CHAIN LINK GATE AND FENCE SET (SEE DRAWING NUMBER 6/7).

G-2: FARM FENCE AND GATE SET (SEE DRAWING NUMBER 6/8).

PERMANENT FENCE LINE COORDINATES

POINT	X	Y	POINT	X	Y
1	1,078,055.73	73,682.18	16	1,072,337.21	73,441.43
2	1,077,590	73,484	17	1,072,205.59	73,412.52
3	1,076,760	73,656	18	1,072,099.30	73,411.52
4	1,076,490	74,112	19	1,071,972.07	73,424.92
5	1,076,393	74,175	20	1,072,208.25	73,612.88
6	1,075,763	74,363	21	1,073,067	74,043
7	1,075,400	74,324	22	1,073,455	74,230
8	1,074,871	74,547	23	1,073,645	74,713
9	1,074,623	74,600	24	1,074,713	74,944
10	1,074,392	74,588	25	1,076,531	74,385
11	1,073,925	74,528	26	1,076,873	73,904
12	1,073,560	73,957	27	1,077,029	73,804
13	1,073,005	73,743	28	1,077,572	73,673
14	1,072,645	73,580	29	1,078,008	73,812
15	1,072,457	73,502			

LEGEND

—⊗— CHAIN LINK FENCE

—×— FARM FENCE

---------- EXISTING FARM FENCE

200 100 0 200 400FT

DEPARTMENT OF THE ARMY
JACKSONVILLE DISTRICT, CORPS OF ENGINEERS
JACKSONVILLE, FLORIDA

ESTATE MON BIJOU
ST. CROIX, U.S. VIRGIN ISLANDS

FLOOD CONTROL CHANNEL

MISCELLANEOUS AND OPS ITEMS
FENCE LAYOUT

DESIGN ENG.:
DWN. BY | CKD. BY | INV. NO. | SIZE F | DRAWING NO. 6/5
DATED:
SCALE: AS SHOWN | DATED: AUGUST 1993 | SHEET OF

D. O. FILE NUMBER 109-36,488

$$USERNAME$$ $$$DGN$$SPECIFICATION$$$$$$ $$$$$$SYTIME$$$$$

.../dms00722/VIMB0605.DGN 03/18/2004 08:28:50 AM

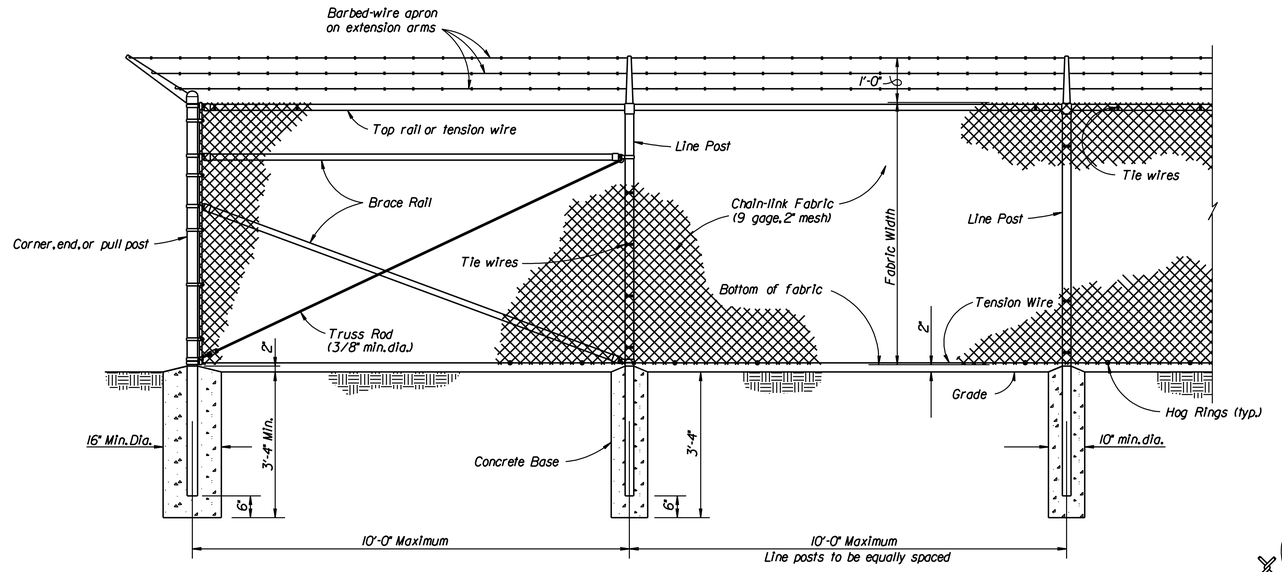

CHAIN-LINK SECURITY FENCE DETAIL

NO SCALE

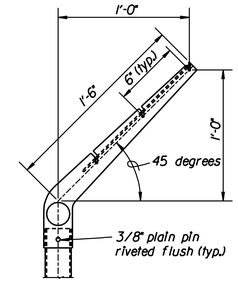

LINE POST

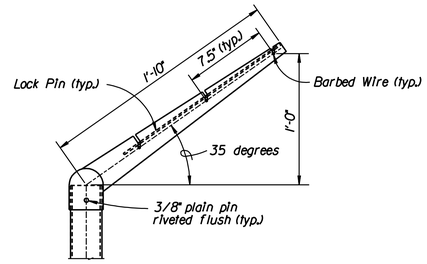

CORNER POST

EXTENSION ARM DETAILS

NO SCALE

STEEL POST SCHEDULE			
USE AND SECTION	MINIMUM OUTSIDE DIMENSIONS (NOMINAL)		
	FABRIC LESS THAN 72"	FABRIC 72" TO 96"	FABRIC OVER 96"
Corner, End & Pull Posts			
Tubular - Round	2.375" O.D.	2.875" O.D.	4.00" O.D.
Tubular - Square	2.00" SQ.	2.50" SQ.	3.00" SQ.
C-Section (Roll-Formed)	3.50" x 3.50"	3.50" x 3.50"	———
Line Posts			
Tubular - Round	1.90" O.D.	2.375" O.D.	2.875" O.D.
H-Section	2.25" x 1.70"	2.25" x 1.70"	2.25" x 1.70"
C-Section (Roll-Formed)	1.875" x 1.625"	2.25" x 1.70"	———
Top, Bottom & Brace Rails			
Tubular - Round	1.66" O.D.		
Tubular - Square	1.50" O.D.		
H-Section	1.625" x 1.50"		
C-Section (Roll-Formed)	1.625" x 1.25"		

NOTES:
1. Details shown are to clarify requirements and are not intended to limit other types of fence sections and methods of installation.
2. Wire ties, rails, posts, and braces shall be constructed on the secure side of the fence alignment. Chain-link fabric shall be placed on the opposite side of the secure area.
3. Unless specifically shown or specified, all FE6 fence shall have apron extended outward from the area being protected.
4. C-section posts shall be installed so that the void inside the post is completely filled with concrete up to the top of the foundation.

FENCE LEGEND:

Type FE5 - Chain-Link Fence Without barbed-wire apron
Type FE6 - Chain-Link Fence w/barbed-wire on single outrigger
Type FE7 - Chain-Link Fence w/barbed wire on double outrigger
Type FE8 - Chain-Link Fence w/barbed-wire and barbed-tape on double outrigger
TR - Fence with top rail and tension wire at bottom
TBR - Fence with top and bottom rails
TWB - Tension wire top and bottom
TWBR - Fence with top tension wire and bottom rail
Final number is fabric width in inches.

Examples:

FE6-TR-72 - Chain-Link security fence with barbed-wire on single outrigger, top rail, and 72 inch fabric width.
FE5-TWB-48 - Chain-Link security fence with no apron, top and bottom tension wire, and 48 inch fabric width.

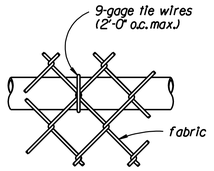

TOP OR BRACE RAIL ATTACHMENT

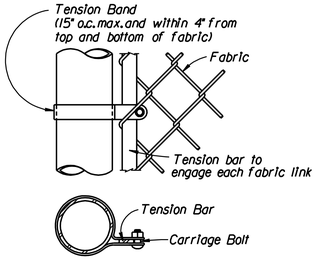

ROUND POST

END OR GATE POST DETAIL

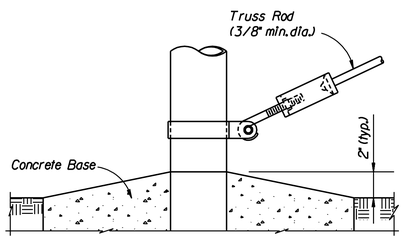

TRUSS ROD AND BAND

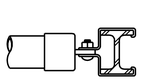

H-BEAM

BRACE RAIL CLAMP DETAILS

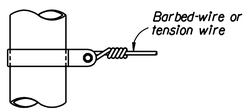

TENSION BAND DETAIL

FASTENING DETAILS

NO SCALE

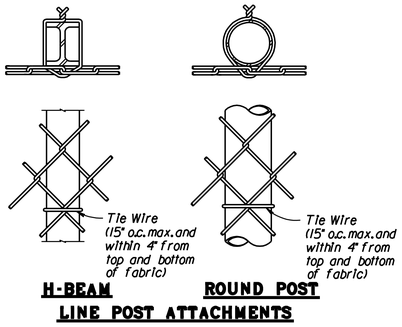

H-BEAM

ROUND POST

LINE POST ATTACHMENTS

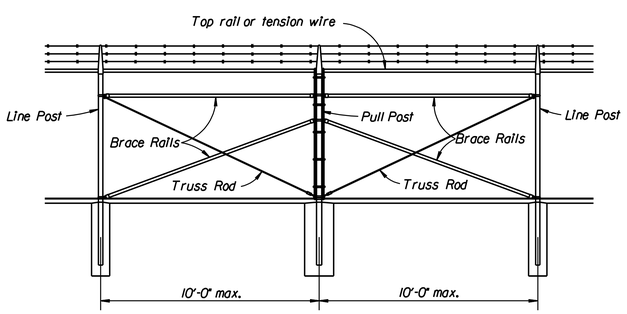

BRACE PANEL DETAIL

NO SCALE

NOTE:
Provide brace panel whenever straight runs exceed 500 feet.

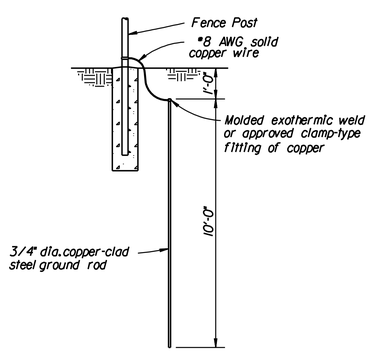

GROUNDING DETAIL

NO SCALE

$$ · THINK VALUE ENGINEERING · $$

REVISIONS			
SYMBOL	DESCRIPTIONS	DATE	APPROVED

DEPARTMENT OF THE ARMY
JACKSONVILLE DISTRICT, CORPS OF ENGINEERS
JACKSONVILLE, FLORIDA

ESTATE MON BIJOU
ST. CROIX, U.S. VIRGIN ISLANDS

FLOOD CONTROL CHANNEL

MISCELLANEOUS AND OPS ITEMS
CHAIN LINK FENCE DETAILS

DESIGN ENG.:			
DWN. BY	CKD. BY	INV. NO.	SIZE F / DRAWING NO. 6/6
		DATED:	
		SCALE: AS SHOWN	DATED: AUGUST 1993 / SHEET OF

D. O. FILE NUMBER 109-36,488

.../dms00722/VIM80606.DGN 03/18/2004 08:28:53 AM

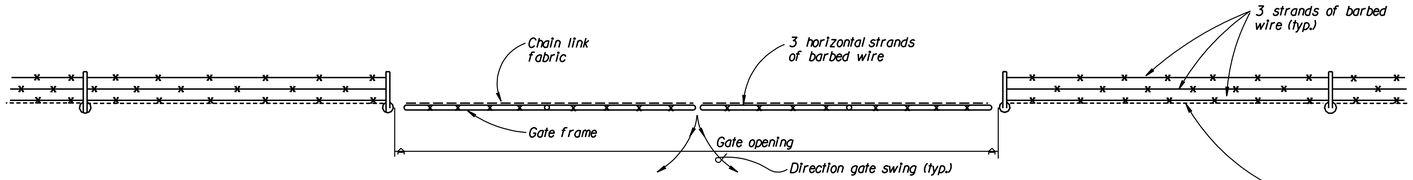

PLAN

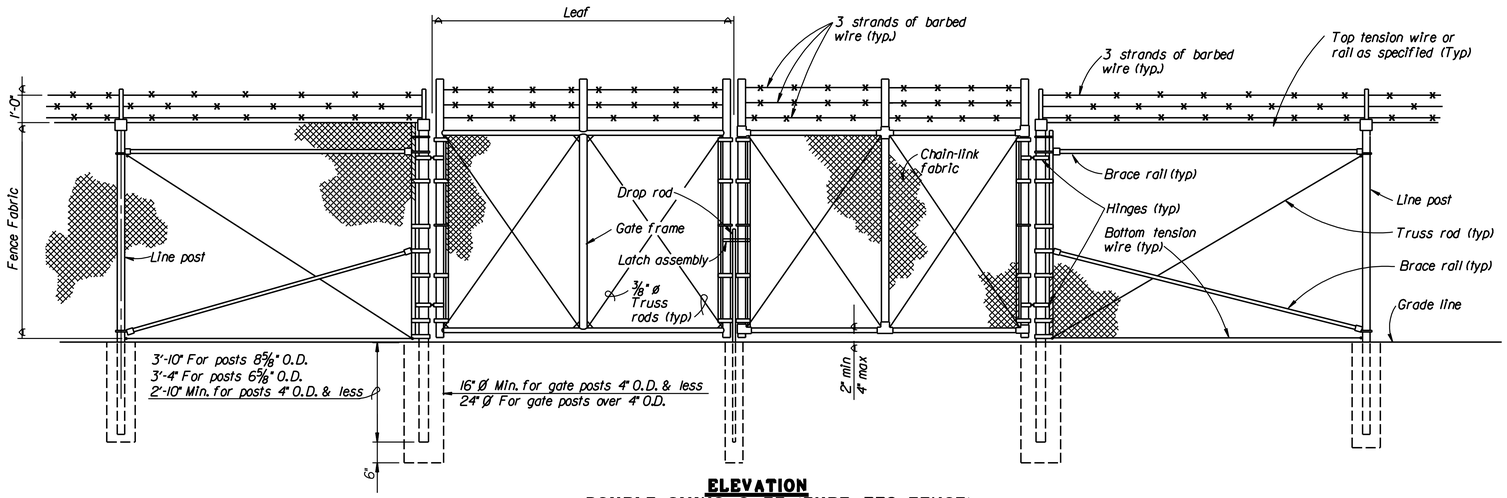

ELEVATION
DOUBLE SWING GATE (TYPE FE6 FENCE)

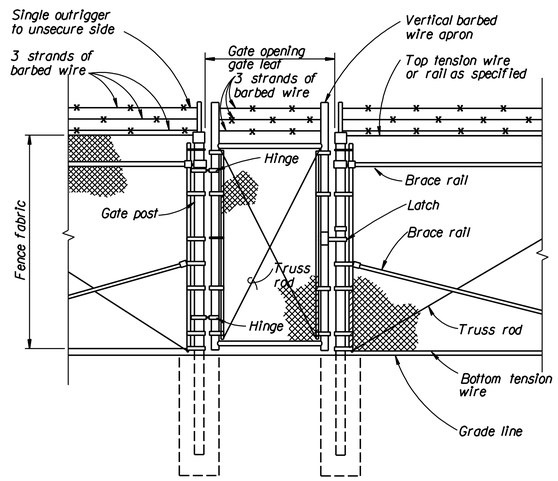

PERSONNEL GATE
TYPE FE6 FENCE

GATE POST SCHEDULE	
GATE LEAF WIDTH (NOMINAL)	OUTSIDE DIMENSION (NOMINAL)
6' or less	2.875" OD 2.5" SQ
More than 6' to 13'	4.0" OD
More than 13' to 18'	6.625" OD
More than 18'	8.625" OD

NOTES:
1. Details shown are to clarify requirements and are not intended to limit other type of fence sections and methods of installation.
2. Swing Gates shall be constructed with drop rods, padlocks, latch assembly and gate keepers except as noted.
3. All gate frames shall be a minimum 1.90" nominal (round) or 2.00" nominal (square). Gate frames shall be of welded construction or shall be assembled using heavy fittings. At Contractor's option a welded horizontal brace may be used in lieu of truss rods to brace all welded gate frames. The Contractor shall be responsible for the proper rigid construction of all gates supplied.
4. Gates shall be designated as follows:
   Fence Type - FE5, FE6, etc.
   Fence Height - Inches
   Type Opening - SO (single)
   - DO (double)
   Hinge - RA (standard)
   - HO (offset)
   Opening - Feet (clear opening between gate posts)
   EXAMPLES: FE6-84-DO-RA-24
   FE5-48-SO-HO-6

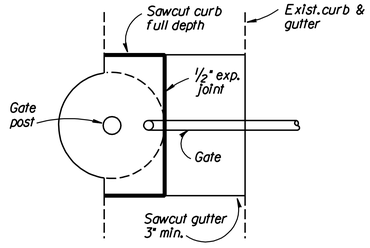

PLAN

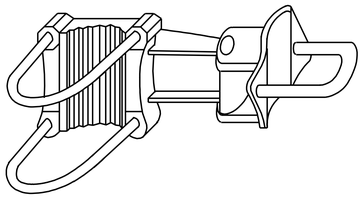

OFFSET HINGE

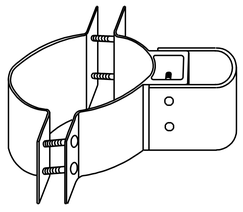

STANDARD HINGE

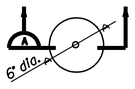

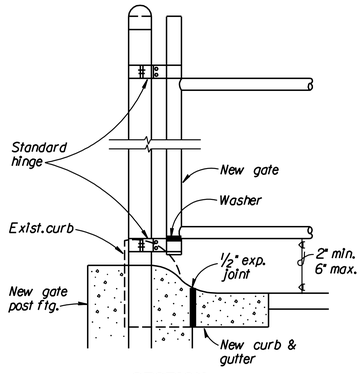

SECTION
GATE POST DETAIL
AT CURB AND GUTTER
NO SCALE

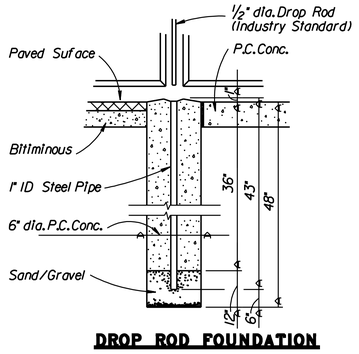

DROP ROD FOUNDATION

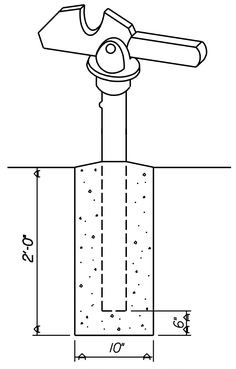

GATE KEEPER
(TO HOLD GATE OPEN)

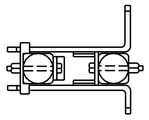

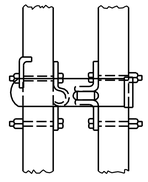

LATCH ASSEMBLY

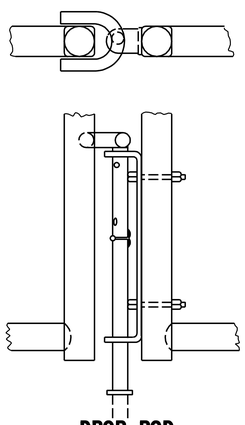

DROP ROD ASSEMBLY

SWING GATE DETAILS
NO SCALE

REVISIONS			
SYMBOL	DESCRIPTIONS	DATE	APPROVED

$$ · THINK VALUE ENGINEERING · $$

DEPARTMENT OF THE ARMY
JACKSONVILLE DISTRICT, CORPS OF ENGINEERS
JACKSONVILLE, FLORIDA

ESTATE MON BIJOU
ST. CROIX, U.S. VIRGIN ISLANDS

FLOOD CONTROL CHANNEL

MISCELLANEOUS AND OPS ITEMS
CHAIN LINK GATE DETAILS

DESIGN ENG.:					
DWN. BY	CKD. BY	INV. NO.		SIZE F	DRAWING NO. 6/7
		DATED:			
		SCALE: AS SHOWN	DATED: AUGUST 1993	SHEET	OF

D. O. FILE NUMBER 109-36,488

.../dms00722/VIMB0607.DGN 03/18/2004 08:28:55 AM

SAFETY ON THIS JOB DEPENDS ON YOU

REVISIONS					
NO.	SYM.	ZONE	DESCRIPTION	DATE	APPROVED

NOTE:
1. EACH HORIZONTAL BARBED WIRE TO BE WRAPPED COMPLETLY AROUND PULL POST AND TIED TO SAME WIRE.

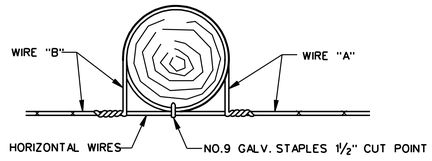

SPLICE DETAIL AT CORNER OR PULL POST
NOT TO SCALE

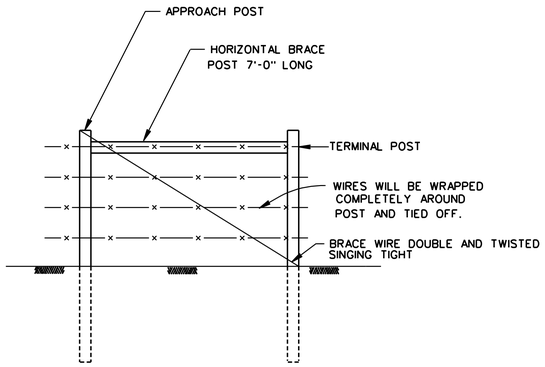

TYPICAL TERMINAL DETAIL
SCALE "C"

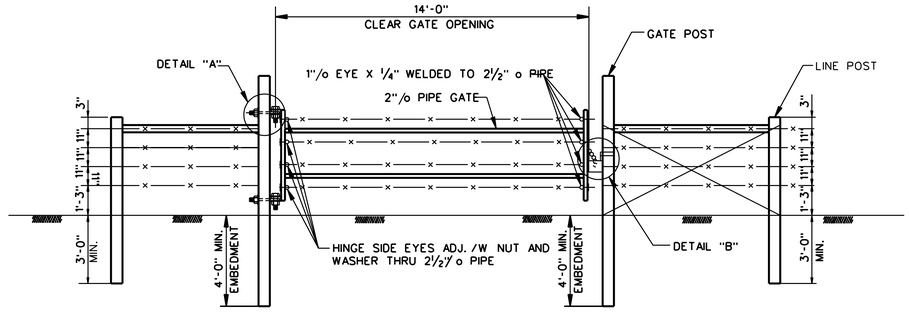

TYPICAL GATE DETAILS
SCALE "B"

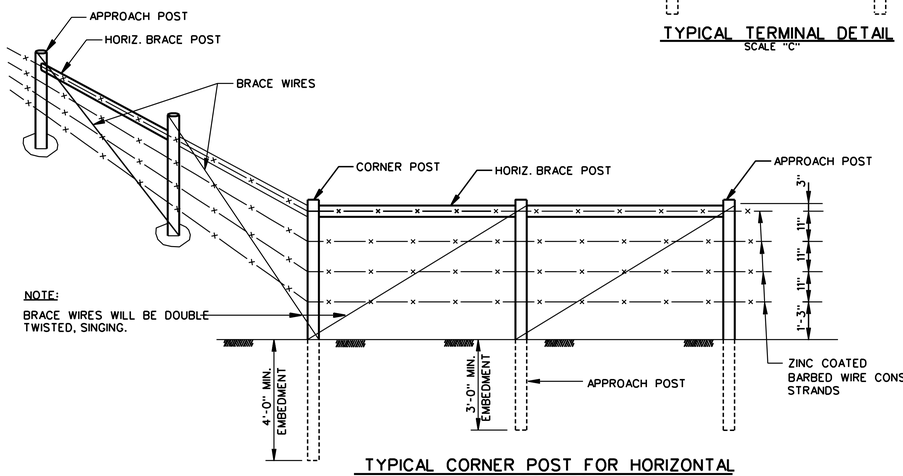

TYPICAL CORNER POST FOR HORIZONTAL CHANGES FROM 30 TO 90
SCALE "C"

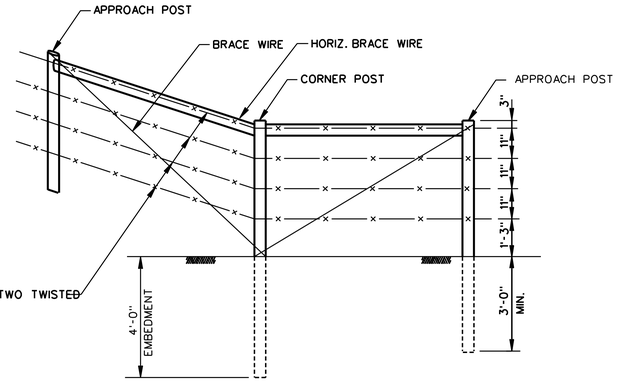

TYPICAL CORNER POST FOR HORIZONTAL CHANGES FROM 9 TO 30
SCALE "C"

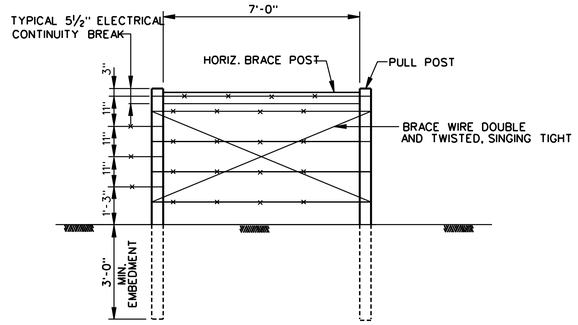

TYPICAL PULL POST AND INSULATION INSTALLATION
SCALE "C"

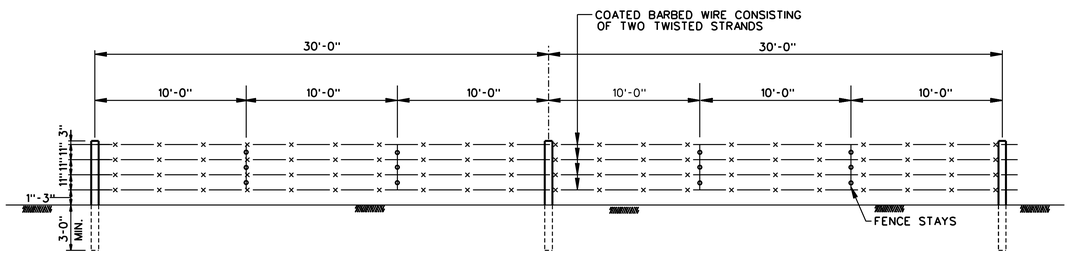

NOTE: FENCE STAYS SHALL BE CONSTRUCTED BY TWISTING THE WIRE WITH SUFFICIENT TURNS BETWEEN EACH STRAND OF BARBER WIRE TO MAINTENCE THE PROPER SPACING.

TYPICAL FENCE DETAILS
SCALE "A"

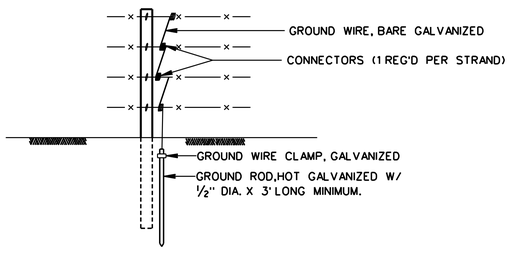

TYPICAL FENCE GROUNDING DETAIL
SCALE "C"

1. FENCE ELECTRICAL CONTINUITY SHALL BE BROKEN AND FENCE WIRING SHALL BE GROUNDED AS SHOWN AND IN ACCORDANCE WITH THE "LIGHTNING PROTECTION CODE-1965" NATIONAL FIRE PROTECTION ASSOCIATION PAMPHLET NO. 78.
2. ELECTRICAL CONTINUITY SHALL BE BROKEN AT EACH PULL POST.
3. FENCE WIRING SHALL BE GROUNDED AT INTERVALS NOT EXCEEDING 200' AND BENEATH ALL OVERHEAD POWER LINES.

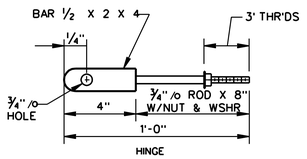

DETAIL "A"

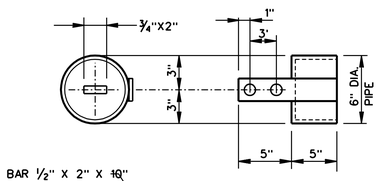

DETAIL "B"

POST SIZE SCHEDULE			
POST DESIGNATION	MIN. DIAM.	LENGTH	MIN. EMBEDMENT
TERMINAL POST	4"	8'-0"	3'-0"
LINE POST	4"	8'-0"	3'-0"
APPROACH POST	4"	8'-0"	3'-0"
HORIZONTAL BRACE POST	4"	7'-0"	
PULL POST	2½"	8'-0"	3'-0"
CORNER POST	4"	8'-0"	4'-0"
GATE POST	6"	10'-0"	4'-0"

GENERAL NOTES:

1. THESE INSTALLATIONS ARE TYPICAL AND REPRESENTATIVE OF CONDITIONS THAT WILL BE ENCOUNTERED. CONSTRUCTION MAY BE VARIED TO MEET FIELD CONDITIONS ONLY UPON APPROVAL.
2. ALL HORIZONTAL BRACES WILL BE CENTERED VERTICALLY WITH THE TOP WIRE AND SHALL BE NAILED TOP AND BOTTOM ON EACH END WITH 10 PENNY GALVANIZED NAILS.
3. PULL POSTS TO BE INSTALLED AT MINIMUM ¼ MILE INTERVALS AND AT VERTICAL CHANGES IN GRADE FROM 15% TO 90%
4. SEE SPECIFICATIONS FOR WIRE GAUGE.

GRAHIC SCALES

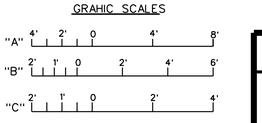

DEPARTMENT OF THE ARMY
JACKSONVILLE DISTRICT, CORPS OF ENGINEERS
JACKSONVILLE, FLORIDA

ESTATE MON BIJOU
ST. CROIX, U.S. VIRGIN ISLANDS

FLOOD CONTROL CHANNEL
MISCELLANEOUS AND OPS ITEMS
FARM FENCE DETAILS

DESIGN ENG.: x				
DWN. BY J.M.	CKD. BY x	INV. NO.	SIZE F	DRAWING NO. 6/8
		DATED:		
		SCALE: AS SHOWN	DATED: AUGUST 1993	SHEET 25 OF

D.O.FILE NO. 109-36,488

\\USERNAME\S $$$DOMSPECIFICATION$$$$$$$$$$ $$$$$$$$SYTIME$$$$$$

.../dms08722/VIMB0608.DGN 03/18/2004 08:28:57 AM

SAFETY ON THIS JOB DEPENDS ON YOU

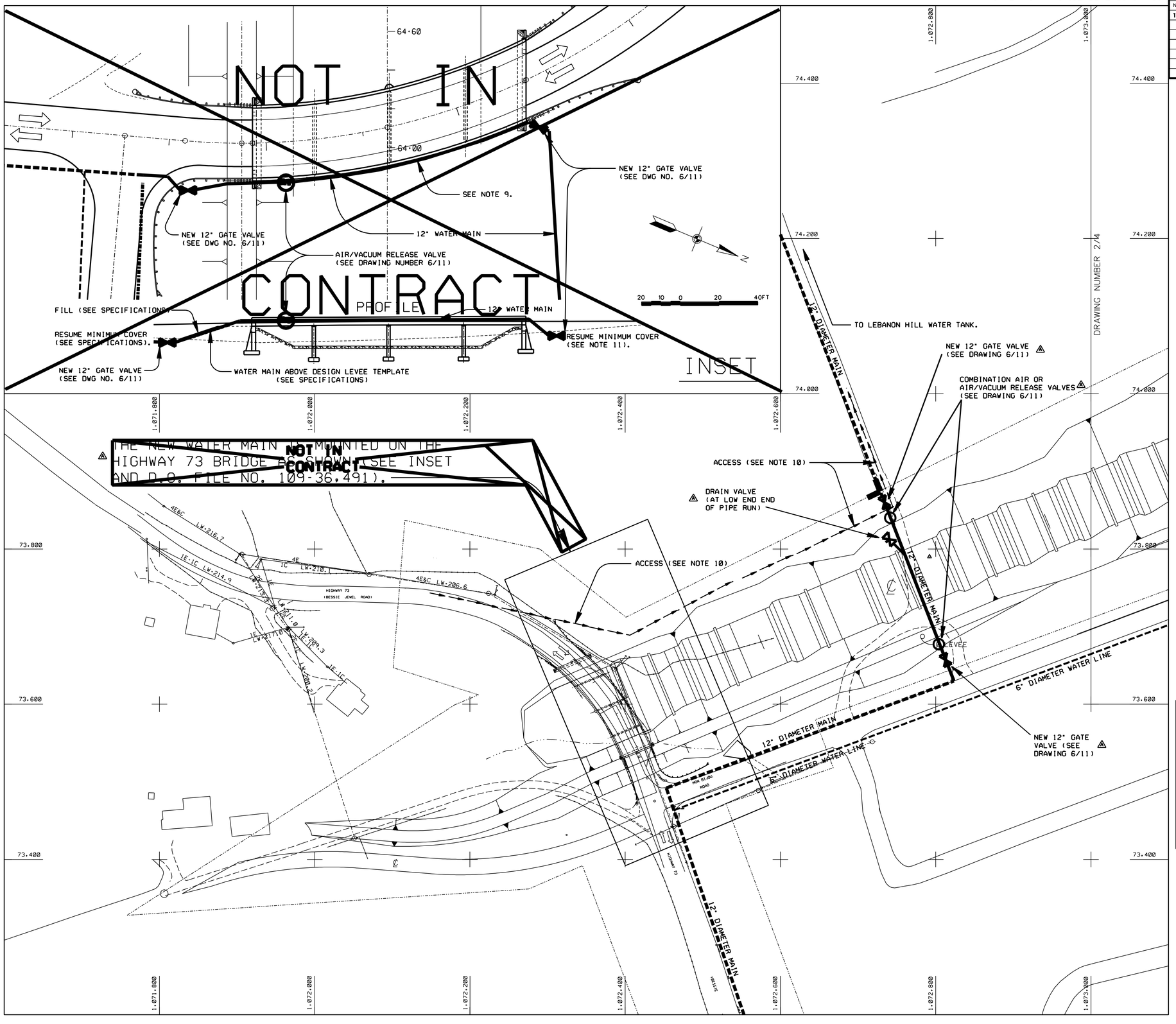

REVISIONS

NO.	SYM.	ZONE	DESCRIPTION	DATE	APPROVED
11	△		VALVE AND WATER LINE CLARIFICATION		

NOTES:

1. THE CONTRACTOR SHALL SECURE ALL PERMITS FOR WATER LINE RELOCATION PRIOR TO INITIATING CONSTRUCTION.
2. SEE DRAWING NUMBER 2/5 FOR DETAILED SITE INFORMATION.
3. NEW WATER SYSTEM SHALL BE IN SERVICE PRIOR TO TERMINATING EXISTING LINES.
4. △ PIPE INSTALLATION ALONG HIGHWAY 73 SHALL BE COORDINATED WITH ROAD AND BRIDGE CONSTRUCTION. NOT IN CONTRACT
5. THRUST RESTRAINTS SHALL BE INSTALLED AT ALL CHANGES IN PIPE DIRECTION.
6. SEE SPECIFICATIONS FOR WATER LINE RELOCATION REQUIREMENTS.
7. EXISTING UTILITY LOCATIONS ARE BASED UPON THE BEST AVAILABLE INFORMATION.
8. SEE DRAWING NUMBER 6/11 FOR ALL WATER LINE DETAILS.
9. △ SEE D.O. FILE NUMBER 109-36,488 FOR WATER MAIN MOUNTING DETAILS ACROSS THE HIGHWAY 73 BRIDGE. NOT IN CONTRACT
10. THE CONTRACTOR SHALL PROVIDE ACCESS FOR THE VIRGIN ISLANDS WATER AND POWER AUTHORITY FROM HIGHWAY 73 TO THE LEBANON HILL WATER TANK DURING CONSTRUCTION.
11. DEPTH OF COVER FOR WATERLINE SHALL SATISFY UTILITY COMPANY DESIGN STANDARDS. ROAD SHOULDERS AND CROSSINGS SHALL HAVE SUFFICIENT MATERIAL TO WITHSTAND VEHICULAR TRAFFIC OR BE PROTECTED WITH CASING PIPE.
12. △ THE CONTRACTOR SHALL COORDINATE PLACEMENT OF WATER LINE AND TRENCH ACROSS CHANNEL TO AVOID GABIONS.
13. △ THE CONTRACTOR SHALL INSTALL VALVE BOXES AND VALVE PITS FOR EACH VALVE PER SPECIFICATIONS.

LEGEND

EXISTING WATER LINE (TO REMAIN)

NEW WATER LINE TO BE PLACED BELOW CHANNEL INVERT (SEE PROFILE) △

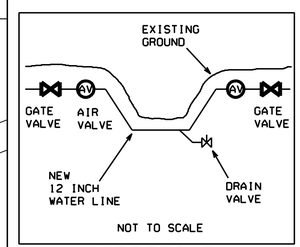

△ PROFILE

50 25 0 50 100FT

DEPARTMENT OF THE ARMY
JACKSONVILLE DISTRICT, CORPS OF ENGINEERS
JACKSONVILLE, FLORIDA

ESTATE MON BIJOU
ST. CROIX, U.S. VIRGIN ISLANDS

FLOOD CONTROL CHANNEL

MISCELLANEOUS AND OPS ITEMS
WATER LINE RELOCATIONS

DESIGN ENG.:				
DWN. BY	CKD. BY	INV. NO.	SIZE F	DRAWING NO. 6/9
		DATED:		
		SCALE: AS SHOWN	DATED: AUGUST 1993	SHEET OF

D. O. FILE NUMBER 109-36,488

$$USERNAME$$ $$$DGN$$SPECIFICATION$$$$$$ $$$$$$SYTIME$$$$$

.../dms00722/VIMB0609.DGN 5/3/2004 11:27:32 AM

SAFETY ON THIS JOB DEPENDS ON YOU

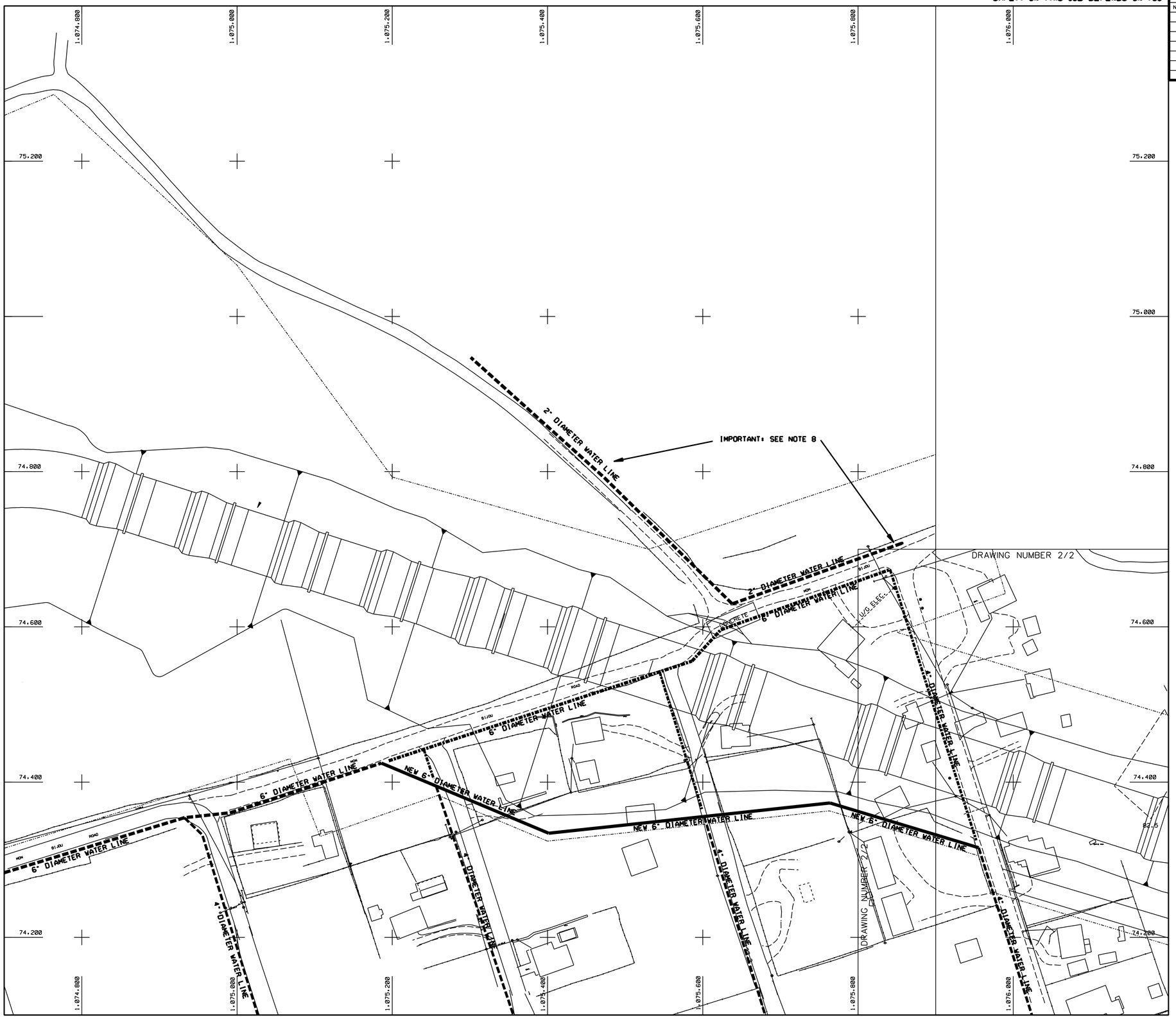

REVISIONS

NO.	SYM.	ZONE	DESCRIPTION	DATE	APPROVED

NOTES:

1. THE CONTRACTOR SHALL SECURE ALL PERMITS FOR WATER LINE RELOCATION PRIOR TO INITIATING CONSTRUCTION.
2. SEE DRAWING NUMBERS 2/2 AND 2/3 FOR DETAILED SITE INFORMATION.
3. NEW WATER SYSTEM SHALL BE IN SERVICE PRIOR TO TERMINATING EXISTING LINES.
4. THRUST RESTRAINTS SHALL BE INSTALLED AT ALL CHANGES IN PIPE DIRECTION.
5. SEE SPECIFICATIONS FOR WATER LINE RELOCATION REQUIREMENTS.
6. EXISTING UTILITY LOCATIONS ARE BASED UPON THE BEST AVAILABLE INFORMATION.
7. SEE DRAWING NUMBER 6/11 FOR ALL WATER LINE DETAILS.
8. WATER SUPPLY LINE FOR DAIRY CATTLE. CONTRACTOR SHALL MAKE IMMEDIATE REPAIRS IF WATERLINE OR WAPPA WATER METER IS DISTURBED OR DAMAGED.
9. WATER LINE DEPTH OF COVER SHALL SATISFY UTILITY COMPANY DESIGN STANDARDS. ROAD SHOULDERS AND CROSSINGS SHALL HAVE SUFFICIENT MATERIAL COVER TIO WITHSTAND VEHICULAR TRAFFIC OR BE PROTECTED WITH CASING PIPE.

LEGEND

EXISTING WATER LINE (TO REMOVE)

EXISTING WATER LINE (TO REMAIN)

NEW WATER LINE

N

50 25 0 50 100FT

DEPARTMENT OF THE ARMY
JACKSONVILLE DISTRICT, CORPS OF ENGINEERS
JACKSONVILLE, FLORIDA

ESTATE MON BIJOU
ST. CROIX, U.S. VIRGIN ISLANDS

FLOOD CONTROL CHANNEL

MISCELLANEOUS AND OPS ITEMS
WATER LINE RELOCATIONS

DESIGN ENG.:				
DWN. BY	CKD. BY	INV. NO.	SIZE F	DRAWING NO. 6/10
		DATED:		
		SCALE: AS SHOWN	DATED: AUGUST 1993	SHEET OF

D. O. FILE NUMBER 109-36,488

$$USERNAME$$ $$$DGN$$SPECIFICATION$$$$$$ $$$$$$SYTIME$$$$$

.../dms00722/VIMB0610.DGN 03/18/2004 08:28:42 AM

SAFETY ON THIS JOB DEPENDS ON YOU

REVISIONS					
NO.	SYM.	ZONE	DESCRIPTION	DATE	APPROVED

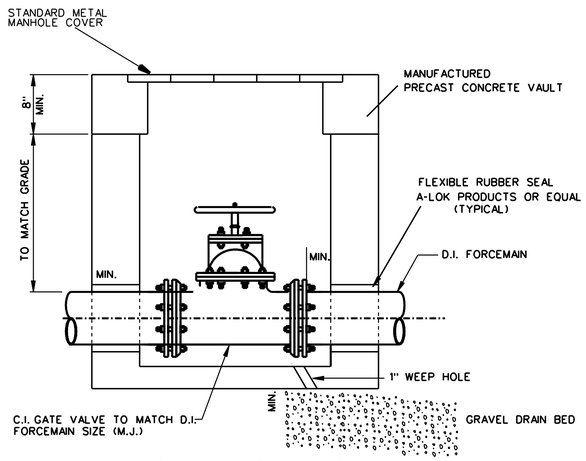

GATE VALVE VAULT

NOT TO SCALE

ABBREVIATIONS

C.I. - CAST IRON
D.I. - DUCTILE IRON
D.I.P. - DUCTILE IRON PIPE
I.D. - INNER DIAMETER
M.J. - MECHANICAL JOINT (RESTRAINED)

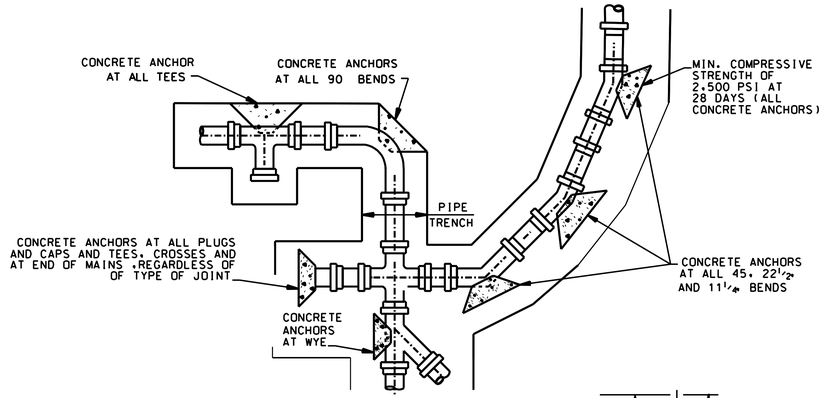

THRUST BLOCK DETAILS

NOT TO SCALE

CONCRETE THRUST BLOCK BEARING ON UNDISTURBED SOIL OF TRENCH WALL IN SQ. FEET AT 100 PSI INTERNAL PRESSURE					
PIPE SIZE	DEAD END	HORIZONTAL BEND 90°	45°	22 1/2°	11 1/2°
4"	2	2	1.1	.6	.3
6"	2	3	1.5	1	1
8"	4	5	3	1.5	1
12"	7	10	6	3	2

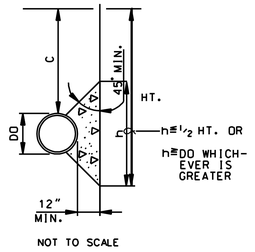

NOT TO SCALE

THRUST BLOCK NOTES:

1. ABOVE BEARING AREAS ARE BASED ON ALLOWABLE SOIL-BEARING PRESSURE OF 2000 LBS./SQ. FT. AND MAY BE VARIED BY THE ENGINEER IF OTHER SOIL CONDITIONS ARE ENCOUNTERED IN THE FIELD.
2. PLASTIC SHEET TO BE USED BETWEEN PIPE AND ANCHOR, PLUGS, CAPS, OR HUBS.
3. RESTRAINED JOINTS MAY BE USED OR ADDED TO CONCRETE ANCHOR IF HORIZONTAL PRESSURE IS GREATER THAN ALLOWABLE SOIL BEARING PRESSURE AS DETERMINED BY THE CONTRACTING OFFICER (4" THRU 20"). RESTRAINED JOINTS SHALL BE USED IN ADDITION TO CONCRETE ANCHOR FOR 24" AND LARGER.
4. CONCRETE ANCHORS ARE REQUIRED ON TAPPING SLEEVES PRIOR TO TAPPING.

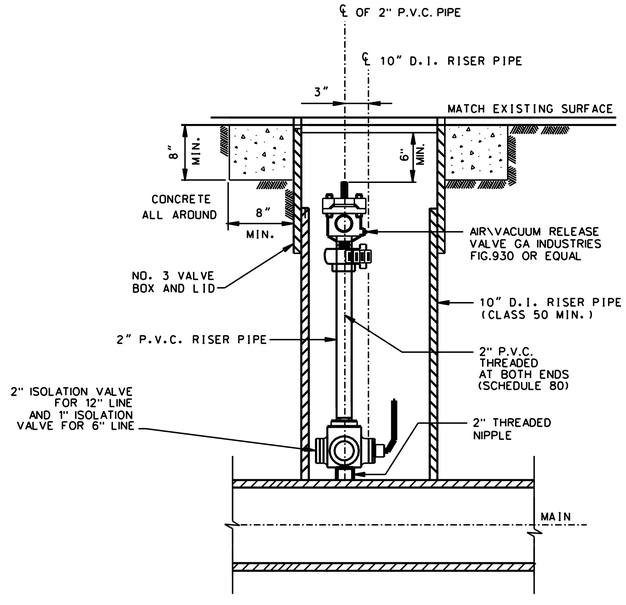

AIR/VACUUM RELEASE BOX

NOT TO SCALE

RISER AND VALVE BOX NOTES:

1. AIR RELEASE RISERS AND VALVE BOX RISERS SHALL BE PLACED AND MAINTAINED IN VERTICAL POSITION.
2. THREADS TO BE COATED WITH BITUMASTIC COATING. (METALLIC ONLY)
3. USE 2" AIR RELEASE VALVE FOR 12" PIPE AND 1" FOR 4" PIPE.
4. ALIGN VALVES IN BOX TO ACCOMODATE OPENINGS.

DEPARTMENT OF THE ARMY
JACKSONVILLE DISTRICT, CORPS OF ENGINEERS
JACKSONVILLE, FLORIDA

ESTATE MON BIJOU
ST. CROIX, U.S. VIRGIN ISLANDS

FLOOD CONTROL CHANNEL

MISCELLANEOUS AND OPS ITEMS
WATER LINE DETAILS

DESIGN ENG. S.M.			
DWG. BY W.F.	CKD. BY	INV. NO.	SIZE F / DWG. NO. 6/11
		DATED:	
		SCALE: AS SHOWN	DATED: AUGUST 1993 / SHEET OF

D.O. FILE NO. 109-36,488

$$USERNAME$$ $$DOMAINSPECIFICATION$$$$$$$$ $$$$$$$$SYSTIME$$$$$$

SAFETY ON THIS JOB DEPENDS ON YOU

REVISIONS

NO.	SYM.	ZONE	DESCRIPTION	DATE	APPROVED
2	A		NOTES REVISED TO CONFORM TO AMENDMENT 0001		

ST. CROIX

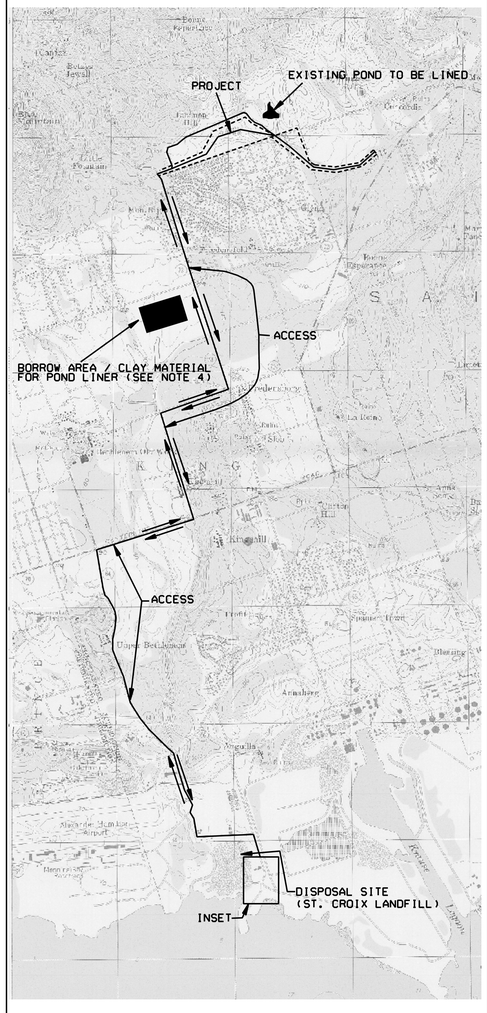

ACCESS TO LANDFILL

ST. CROIX LANDFILL ENTRANCE

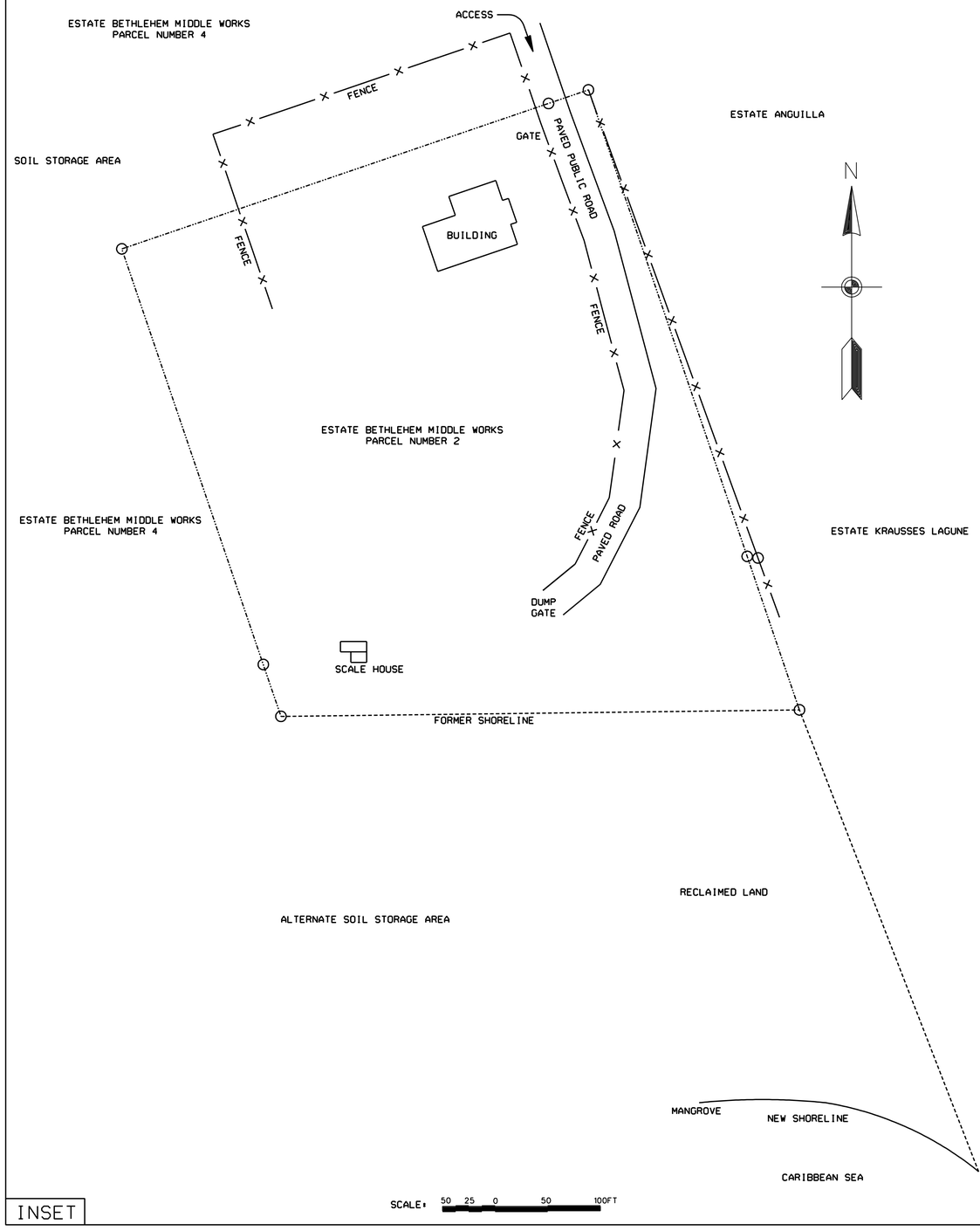

INSET

NOTES:

1. ALL SPOIL, VEGETATION AND TRASH WILL BE HAULED TO THE ST. CROIX LANDFILL FOR DISPOSAL.
2. THE EXACT LOCATION OF DISPOSAL WITHIN THE LANDFILL WILL BE PROVIDED BY THE OPERATOR AS DESCRIBED IN THE SPECIFICATIONS.
3. SEE SPECIFICATIONS FOR ADDITIONAL DISPOSAL REQUIREMENTS.
4. EXACT LOCATION/DIMENSIONS OF CLAY BORROW AREA TO BE COORDINATED WITH COMMISSIONER OF PUBLIC WORKS.
5. (A) TOP SOIL FROM BORROW AREA TO BE STOCKPILED. EXCAVATED MATERIAL FROM FLOOD CONTROL CHANNEL TO BE USED TO REPLACE MATERIAL FROM BORROW SITE AND TOP SOIL REPLACED. GRADE TO MATCH EXISTING ELEVATIONS AND SEED WITH GRASS.
6. THERE ARE NO CHARGES OR FEES FOR USING THE LANDFILL.
7. (A) CONTRACTOR WILL BE REQUIRED TO STACK/STOCKPILE MATERIAL DUE TO LIMITED STORAGE AREA. EQUIPMENT TO STACK/STOCKPILE MATERIAL WILL BE REQUIRED.

DEPARTMENT OF THE ARMY
JACKSONVILLE DISTRICT, CORPS OF ENGINEERS
JACKSONVILLE, FLORIDA

ESTATE MON BIJOU
ST. CROIX, U.S. VIRGIN ISLANDS

FLOOD CONTROL CHANNEL

DISPOSAL AREA
DISPOSAL SITE AND ACCESS

DESIGN ENG.:			
DWN. BY	CKD. BY	INV. NO.	SIZE F / DRAWING NO. 7/1
		DATED:	
SCALE: AS SHOWN		DATED: AUGUST 1993	SHEET 29 OF 29

D. O. FILE NUMBER 109-36,488

$$USERNAME$$ $$$$DGNSPECIFICATION$$$$$$$$ $$$$$$$$SYTIME$$$$$$

SAFETY ON THIS JOB DEPENDS ON YOU

REVISIONS					
NO.	SYM.	ZONE	DESCRIPTION	DATE	APPROVED

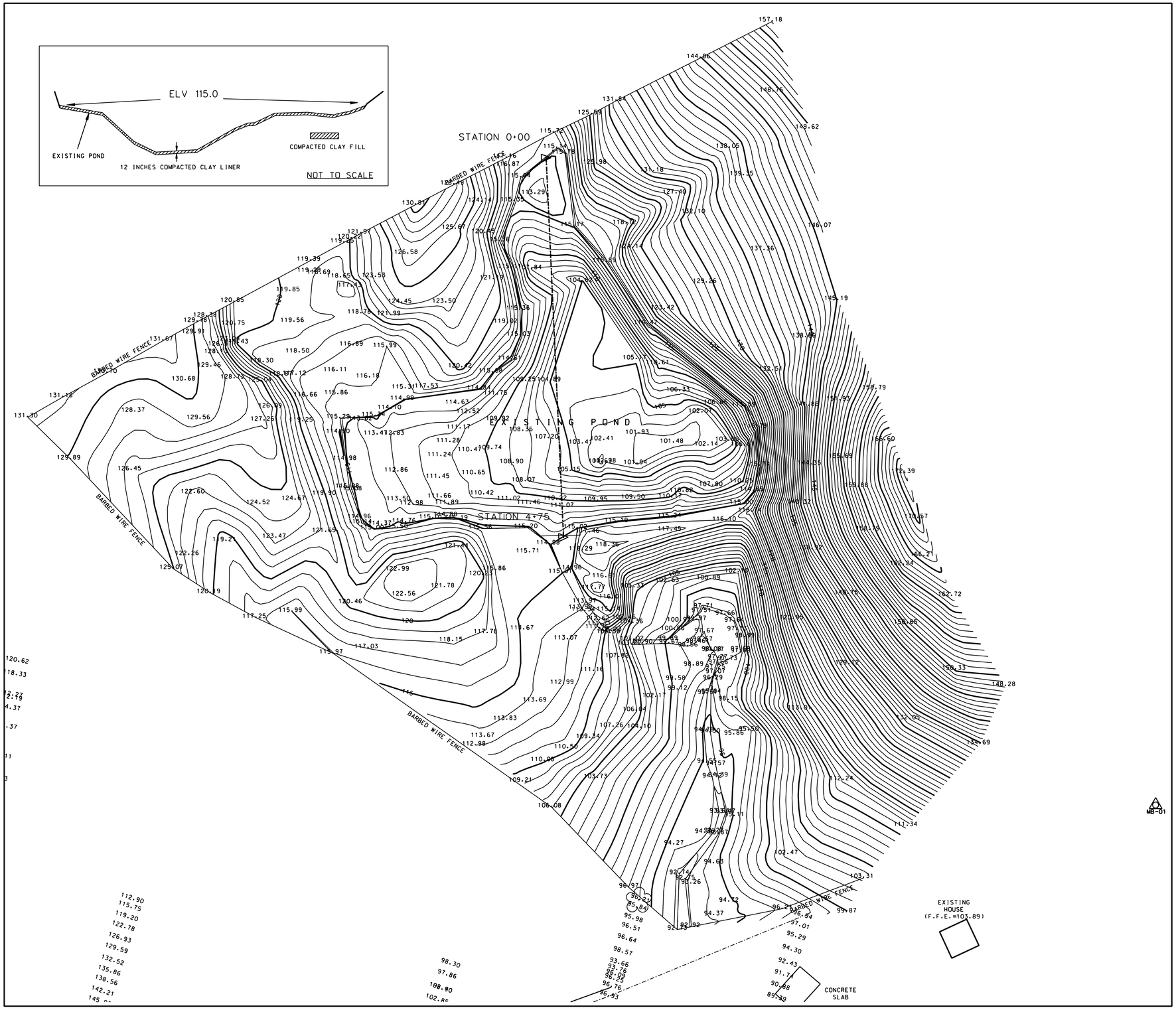

NOTE: CLAY LINER IS TO BE PLACED IN THE DRY. IRRIGATION PUMPS MAY BE REQUIRED TO REMOVE WATER FROM POND WHILE CLAY LINER IS BEING PLACED.

40 20 0 40 80 120
HORIZONTAL SCALE IN FEET

DEPARTMENT OF THE ARMY
JACKSONVILLE DISTRICT, CORPS OF ENGINEERS
JACKSONVILLE, FLORIDA

ESTATE MON BIJOU
ST. CROIX, U.S. VIRGIN ISLANDS

FLOOD CONTROL CHANNEL

EXISTING POND
LAYOUT

DESIGN ENG.:				
DWN. BY	CKD. BY	INV. NO.	SIZE F	DRAWING NO. 8/1
		DATED:		
		SCALE: AS SHOWN	DATED: JANUARY 2004	SHEET OF

D. O. FILE NUMBER 109-36,488

$$USERNAME$$ $$$DGN$$SPECIFICATION$$$$$$ $$$$$$SYTIME$$$$$

.../dms00722/VIMB0801.dgn 03/18/2004 08:29:49 AM

SAFETY ON THIS JOB DEPENDS ON YOU

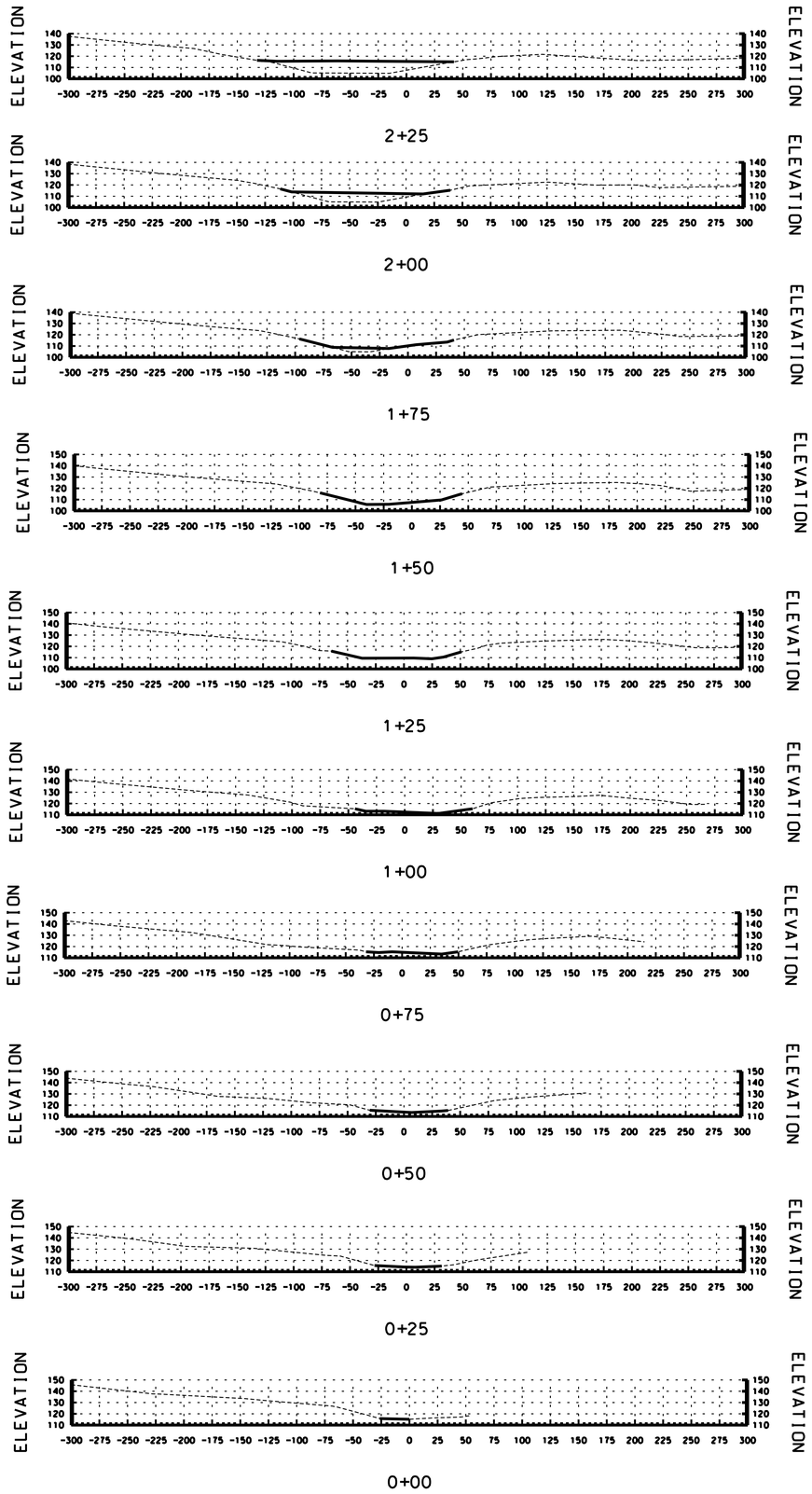

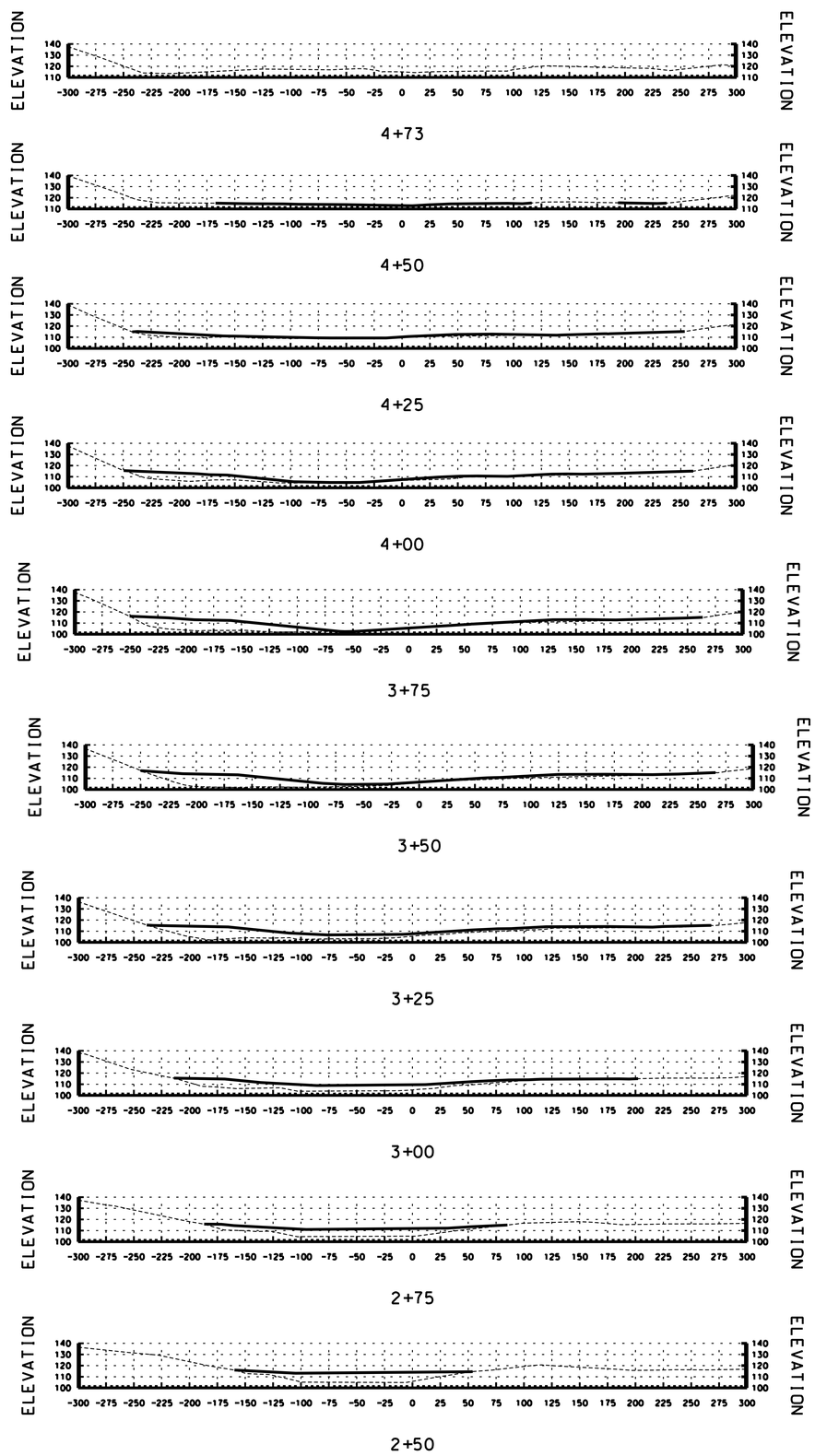

REVISIONS

NO.	SYM.	ZONE	DESCRIPTION	DATE	APPROVED

DEPARTMENT OF THE ARMY
JACKSONVILLE DISTRICT, CORPS OF ENGINEERS
JACKSONVILLE, FLORIDA

ESTATE MON BIJOU
ST. CROIX, U.S. VIRGIN ISLANDS

FLOOD CONTROL CHANNEL

EXISTING POND
CROSS SECTIONS

DESIGN ENG.:
DWN. BY | CKD. BY
INV. NO.
DATED:
SIZE F
DRAWING NO. 8/2
SCALE: AS SHOWN
DATED: JANUARY 2004
SHEET OF

D. O. FILE NUMBER 109-36,488

$$USERNAME$$ $$$DGN$$SPECIFICATION$$$$$$ $$$$$$SYTIME$$$$$$

.../dms00722/VIMB0802.dgn 03/18/2004 08:29:52 AM