AMENDMENT OF SOLICITATION/MODIFICATION OF CONTRACT

1. CONTRACT ID CODE	PAGE OF PAGES

2. AMENDMENT/MODIFICATION NO.	3. EFFECTIVE DATE	4. REQUISITION/PURCHASE REQ. NO.	5. PROJECT NO. *(If applicable)*
0001	19-DEC-2003	W32CS521261470	

6. ISSUED BY CODE W912EP

USA Engineer District, Jacksonville
Prudential Office Bldg.
701 San Marco Blvd
CESAJ-CT
Jacksonville, FL 32207

7. ADMINISTERED BY *(If other than Item 6)* CODE

USA Engineer District, Jacksonville
Prudential Office Bldg.
701 San Marco Blvd
CESAJ-CT
Jacksonville, FL 32207

8. NAME AND ADDRESS OF CONTRACTOR *(No., street, county, State and ZIP Code)*

CODE FACILITY CODE

(√) X

9A. AMENDMENT OF SOLICITATION NO.
W912EP-04-B-0003

9B. DATED *(SEE ITEM 11)*
17-DEC-2003

10A. MODIFICATION OF CONTRACTS/ORDER NO.

10B. DATED *(SEE ITEM 13)*

11. THIS ITEM ONLY APPLIES TO AMENDMENTS OF SOLICITATIONS

[X] The above numbered solicitation is amended as set forth in Item 14. The hour and date specified for receipt of Offers [ ] is extended, [X] is not extended.

Offers must acknowledge receipt of this amendment prior to the hour and date specified in the solicitation or as amended, by one of the following methods:

(a) By completing Items 8 and 15, and returning 1 copies of the amendment; (b) By acknowledging receipt of this amendment on each copy of the offer submitted; or (c) By separate letter or telegram which includes a reference to the solicitation and amendment numbers. FAILURE OF YOUR ACKNOWLEDGMENT TO BE RECEIVED AT THE PLACE DESIGNATED FOR THE RECEIPT OF OFFERS PRIOR TO THE HOUR AND DATE SPECIFIED MAY RESULT IN REJECTION OF YOUR OFFER. If by virtue of this amendment you desire to change an offer already submitted, such change may be made by telegram or letter, provided each telegram or letter makes reference to the solicitation and this amendment, and is received prior to the opening hour and date specified.

12. ACCOUNTING AND APPROPRIATION DATA *(If required)*

13. THIS ITEM APPLIES ONLY TO MODIFICATIONS OF CONTRACTS/ORDERS, IT MODIFIES THE CONTRACT/ORDER NO. AS DESCRIBED IN ITEM 14.

(√) A. THIS CHANGE ORDER IS ISSUED PURSUANT TO: *(Specify authority)* THE CHANGES SET FORTH IN ITEM 14 ARE MADE IN THE CONTRACT ORDER NO. IN ITEM 10A.

B. THE ABOVE NUMBERED CONTRACT/ORDER IS MODIFIED TO REFLECT THE ADMINISTRATIVE CHANGES *(such as changes in paying office, appropriation date, etc.)* SET FORTH IN ITEM 14, PURSUANT TO THE AUTHORITY OF FAR 43.103(b).

C. THIS SUPPLEMENTAL AGREEMENT IS ENTERED INTO PURSUANT TO AUTHORITY OF:

D. OTHER *(Specify type of modification and authority)*

E. IMPORTANT: Contractor [ ] is not, [ ] is required to sign this document and return _____ copies to the issuing office.

14. DESCRIPTION OF AMENDMENT/MODIFICATION *(Organized by UCF section headings, including solicitation/contract subject matter where feasible.)*

LAKE OKEECHOBEE WATER RETENTION/PHOSPHOURUS REMOVAL PROJECT, TAYLOR CREEK, GRASSY ISLAND STORM WATER TREATMENT AREAS, OKEECHOBEE COUNTY, FLORIDA

ANY ENCLOSURES ACCOMPANYING THIS AMENDMENT SHOULD BE INSERTED IN THE PLANS AND SPECIFICATIONS AS APPLICABLE. ALL SUPERSEDED MATERIALS SHOULD BE REMOVED OR ADEQUATELY MARKED TO INDICATE THEY HAVE BEEN SUPERSEDED.

THE DATE FOR RECEIPT OF BIDS REMAINS 03 FEB 2004 at 2:00 PM.

Drawings E114 and E115 are deleted and replaced with new drawings E114 and E115.

Except as provided herein, all terms and conditions of the document referenced in Item 9A or 10A, as heretofore changed, remains unchanged and in full force and effect.

15A. NAME AND TITLE OF SIGNER *(Type or print)*		16A. NAME AND TITLE OF CONTRACTING OFFICER *(Type or print)*	
15B. CONTRACTOR/OFFEROR *(Signature of person authorized to sign)*	15C. DATE SIGNED	16B. UNITED STATES OF AMERICA BY *(Signature of Contracting Officer)*	16C. DATE SIGNED

SF 30 CONTINUATION SHEETS

1. **SPECIFICATIONS:**

   ADD the attached Amendment Number 0001 STANDARD FORM 30 to the Specifications.

2. **DRAWINGS:** D.O. File No. 402-38,292 dated November 2002 in 54 Sheets + Cover. DRAWING NOs. E-114 and E115: Delete existing drawing plates E-114 and E115 and replace with the attached revised drawing and add to the set. There are no other CHANGES to the Drawings.

3. **DESCRIPTIVE DRAWING CHANGES:** None.

SAFETY ON THIS JOB
DEPENDS ON YOU

LAKE OKEECHOBEE WATER RETENTION / PHOSPHORUS REMOVAL PROJECT

PLANS FOR

TAYLOR CREEK - GRASSY ISLAND STORMWATER TREATMENT AREA

DEPARTMENT OF THE ARMY

JACKSONVILLE DISTRICT, CORPS OF ENGINEERS

JACKSONVILLE, FLORIDA

2003

TO ACCOMPANY INVITATION
NO. W912EP-04-B-0003
DATED: 17 DECEMBER 2003

VE *"INCREASE PROFIT -- SUBMIT VECP'S"*

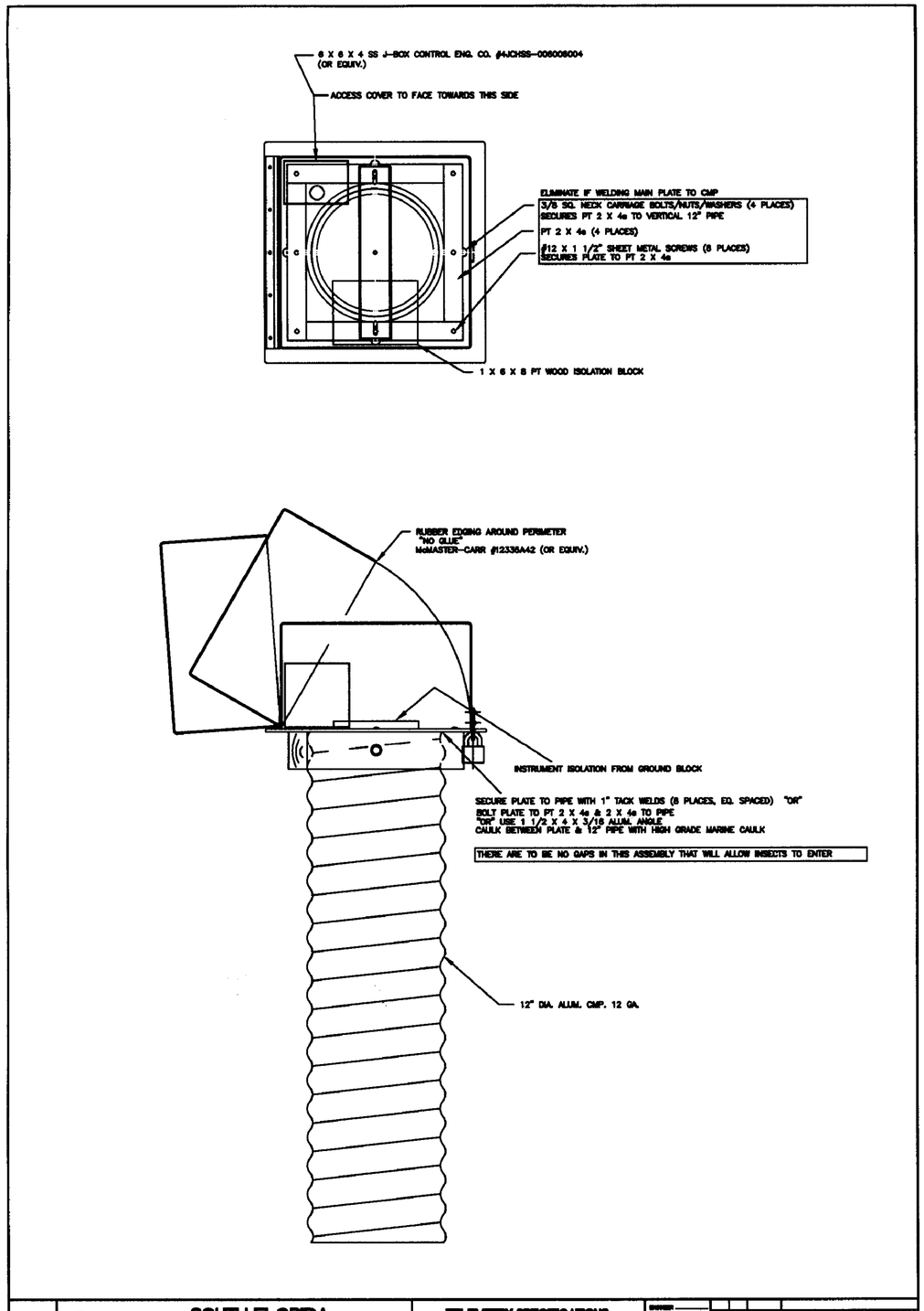

SOUTH FLORIDA WATER MANAGEMENT DISTRICT
WEST PALM BEACH , FLORIDA

TELEMETRY SPECIFICATIONS
18" X 18" WELL HEAD ASSEMBLY

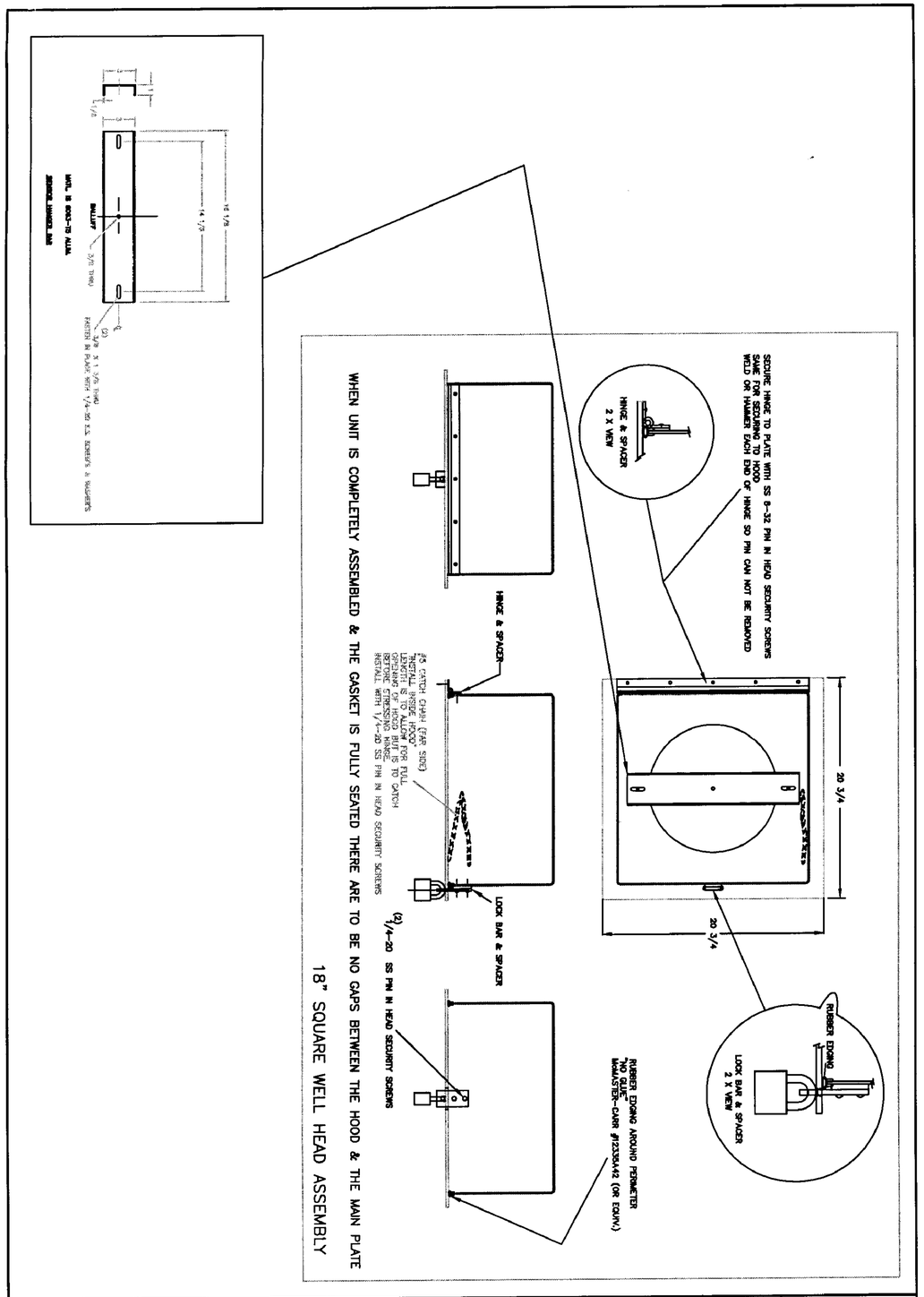

SOUTH FLORIDA WATER MANAGEMENT DISTRICT
WEST PALM BEACH , FLORIDA

TELEMETRY SPECIFICATIONS
18" X 18" WELL HEAD ASSEMBLY

US Army Corps of Engineers
Jacksonville District

SAFETY ON THIS JOB DEPENDS ON YOU

No.	Symbol	Zone	Description	Approved

DEPARTMENT OF THE ARMY
JACKSONVILLE DISTRICT, CORPS OF ENGINEERS
JACKSONVILLE, FLORIDA

PREPARED BY:
STANLEY CONSULTANTS, INC.
1601 BELVEDERE ROAD, SUITE 400 EAST
WEST PALM BEACH, FL 33406
PHONE (561)689-7444 FAX (561)689-3003

Designed by: GGG
Dwn by: KHJ
Ckd by: GGG
Inv. No. W912EP-04-B-0003
Dated:
Scale: AS SHOWN
Plot date: 08/08/02
Plot scale:

Dated: NOVEMBER 2002
D.O.FILE NO. 402-38.292

File name: E114DETL.DGN
Reference files: BROR20.DGN

LAKE OKEECHOBEE WATER RETENTION/ PHOSPHORUS REMOVAL PROJECT
TAYLOR CREEK - GRASSY ISLAND STORMWATER TREATMENT AREAS
ELECTRICAL
OPTICAL ENCODER MOUNTING DETAILS

DRAWING NO.
E114

$$$$$$SYTIME$$$$$$ $$$$$$$DGNSPECIFICATION$$$$$$$

.../fm sci ftp 031216/e114detl.dgn 12/18/2003 02:07:01 PM

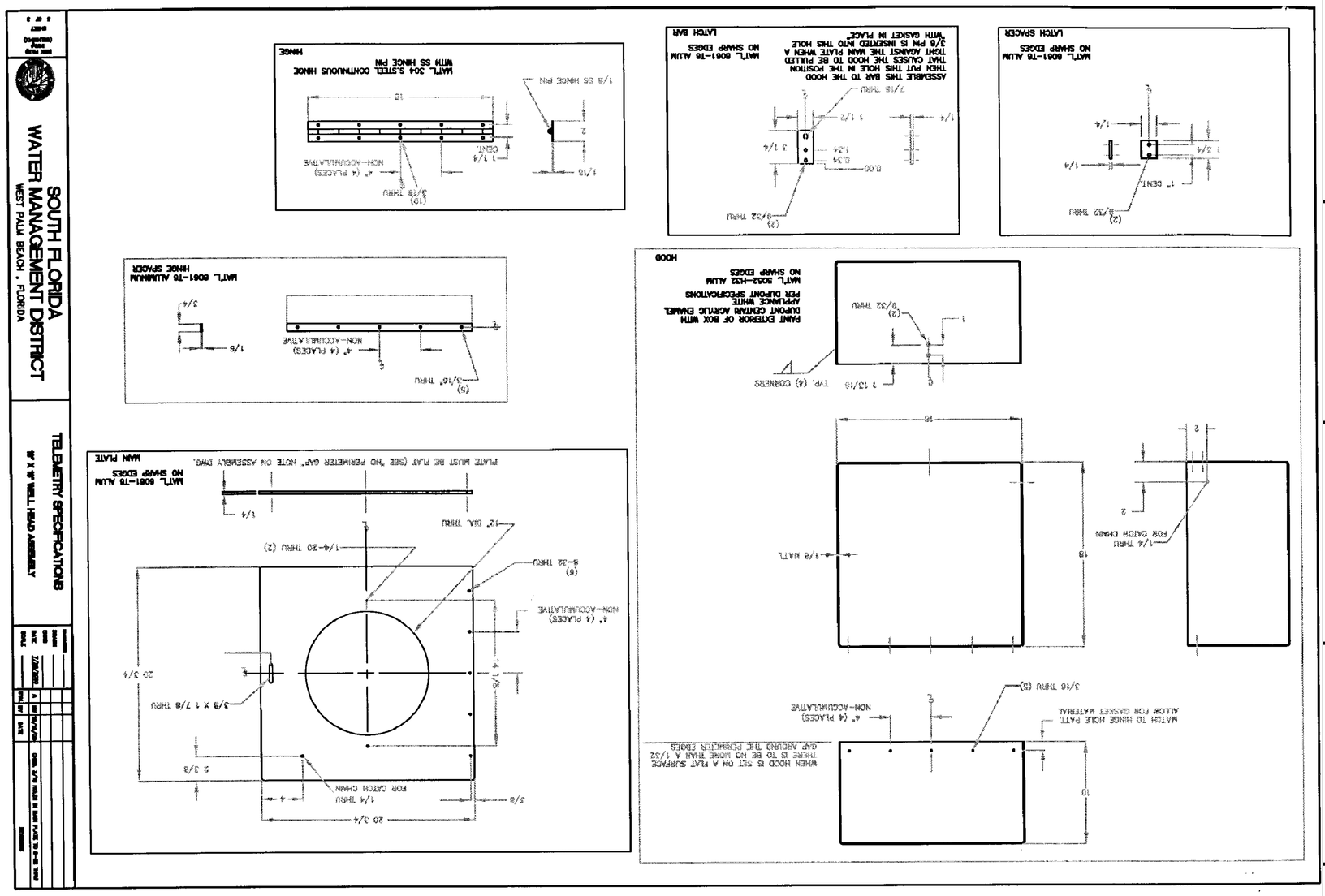

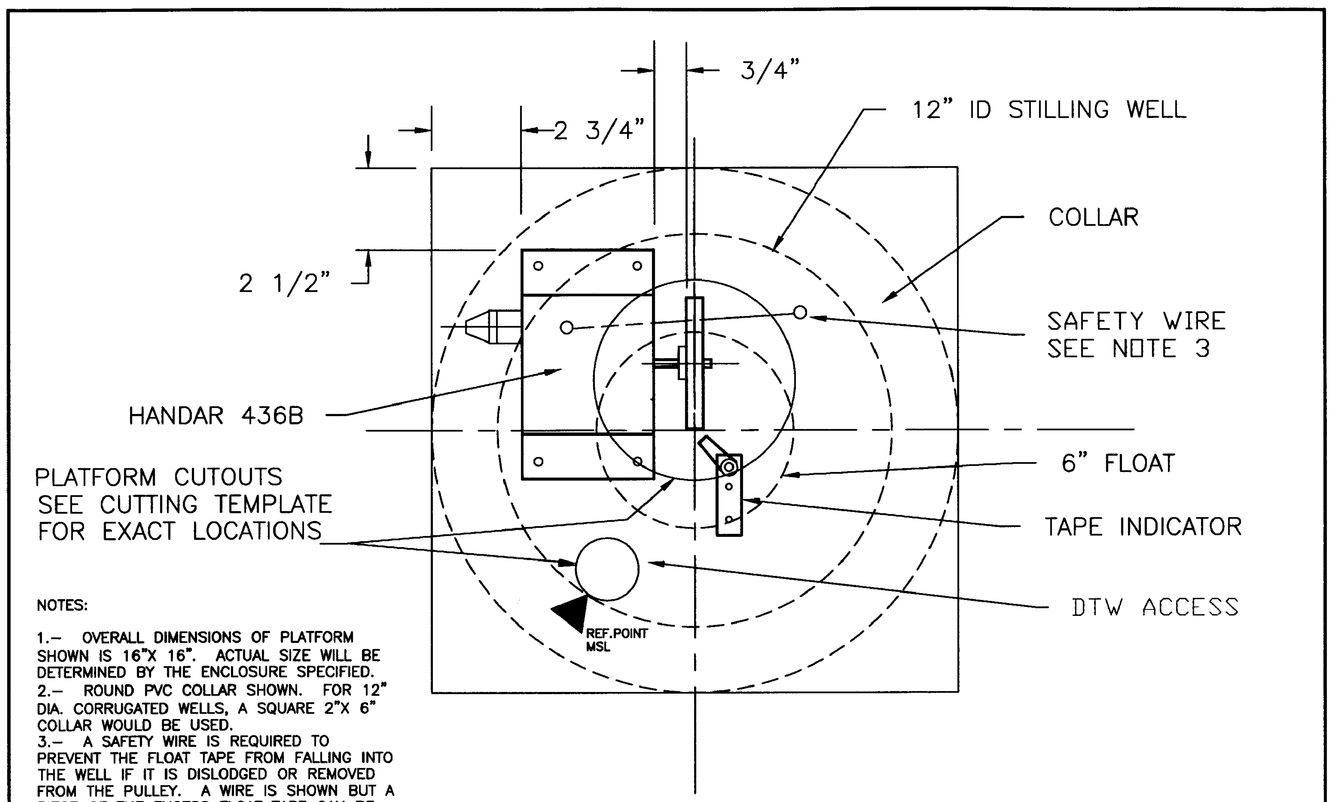

NOTES:

1.– OVERALL DIMENSIONS OF PLATFORM SHOWN IS 16"X 16". ACTUAL SIZE WILL BE DETERMINED BY THE ENCLOSURE SPECIFIED.
2.– ROUND PVC COLLAR SHOWN. FOR 12" DIA. CORRUGATED WELLS, A SQUARE 2"X 6" COLLAR WOULD BE USED.
3.– A SAFETY WIRE IS REQUIRED TO PREVENT THE FLOAT TAPE FROM FALLING INTO THE WELL IF IT IS DISLODGED OR REMOVED FROM THE PULLEY. A WIRE IS SHOWN BUT A PIECE OF THE EXCESS FLOAT TAPE CAN BE USED. ENDS ARE SECURED WITH #6 SS WOOD SCREWS.
4.– ENCODER IS MOUNTED WITH #12 X 1/2" SS PHILLIPS PAN HEAD SCREWS.
5.– TAPE INDICATOR IS MOUNTED WITH #8 X 1" SS PHILLIPS PAN HEAD SCREWS.

REV	DATE	REVISION DESCRIPTION	BY	CH	COR	APP	ORG
01	3/21/97	ADDED SAFETY WIRE & NOTES	WFH				

ENGINEER	W. HERRMANN
DRAWN	W. HERRMANN
CHKD	
DATE	7/8/96
SCALE	
FILENAME	PLAT8.DWG
PLOT SCALE	

SOUTH FLORIDA WATER MANAGEMENT DISTRICT

PLATFORM LAYOUT
12" DIA. WELL, 16"X 16"X 10" SHELTER

DRAWING NO. E115

LAKE OKEECHOBEE WATER RETENTION/ PHOSPHORUS REMOVAL PROJECT
TAYLOR CREEK - GRASSY ISLAND STORMWATER TREATMENT AREAS
ELECTRICAL
OPTICAL ENCODER MOUNTING DETAILS

File name: E115DETL.DGN
Reference files: BROR20.DGN
Designed by: MEP
Dwn by: MLM
Ckd by: GGG
Inv. No. W912EP-04-B-0003
Dated:
Scale: AS SHOWN
Plot date: 08/08/02
Plot scale:
Dated: NOVEMBER 2002
D.O.FILE NO. 402-38,292

DEPARTMENT OF THE ARMY
JACKSONVILLE DISTRICT, CORPS OF ENGINEERS
JACKSONVILLE, FLORIDA

PREPARED BY:
STANLEY CONSULTANTS, INC.
1601 BELVEDERE ROAD, SUITE 400 EAST
WEST PALM BEACH, FL 33406
PHONE (561)689-7444 FAX (561)689-3003

No.	Symbol	Zone	Description	Approved

US Army Corps of Engineers
Jacksonville District
SAFETY ON THIS JOB DEPENDS ON YOU