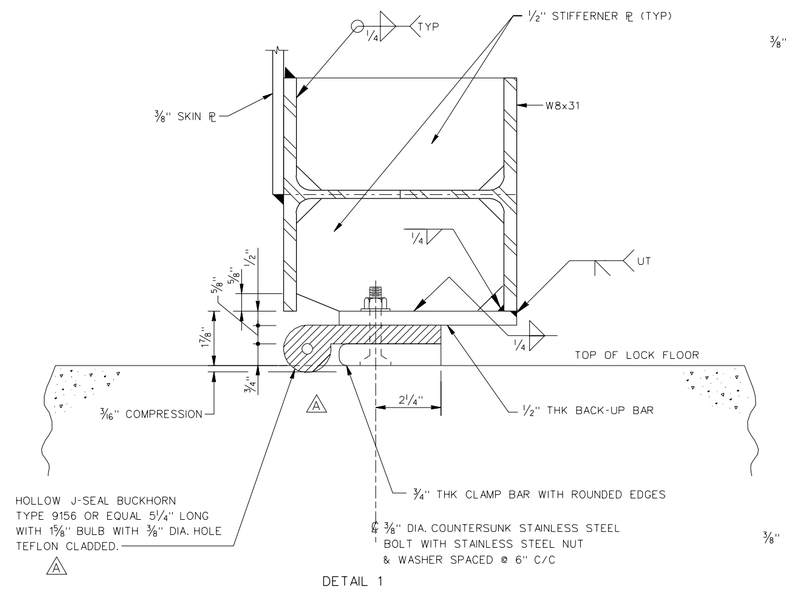

DETAIL 1
SCALE: "B"

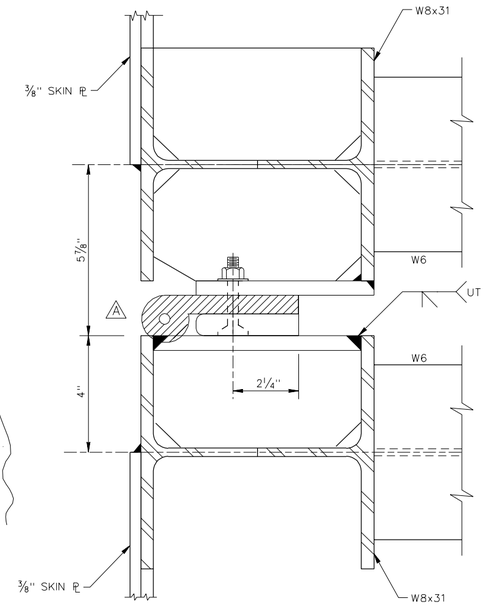

DETAIL 2
SCALE: "B"
NOTE: GUSSETS NOT SHOWN FOR CLARITY

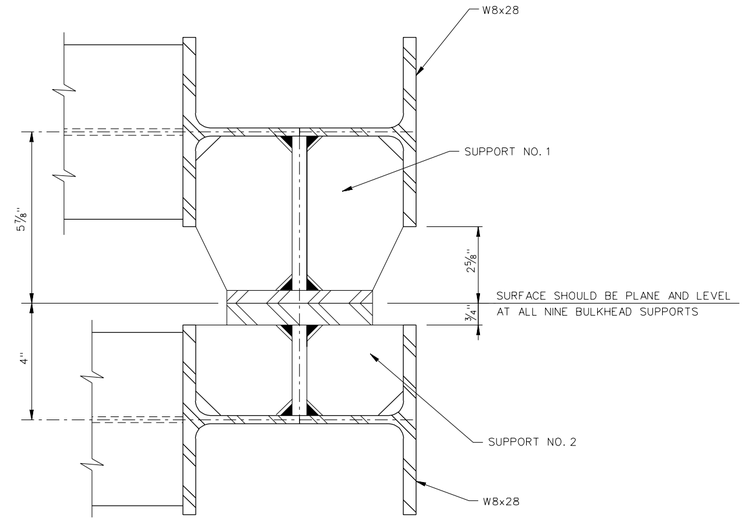

DETAIL 3
SCALE: "B"
NOTE: GUSSETS NOT SHOWN FOR CLARITY

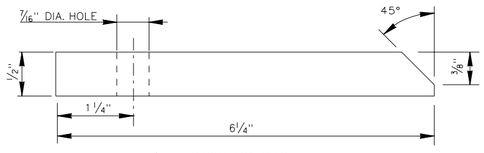

A BACK-UP BAR
N.T.S.

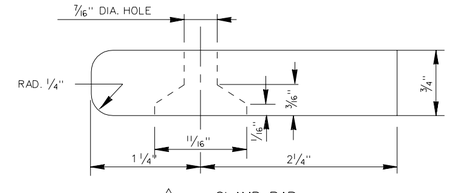

A CLAMP BAR
N.T.S.

NOTE: HOLE TO BE DEPRESSED 1/16" INTO BAR'S BOTTOM SURFACE

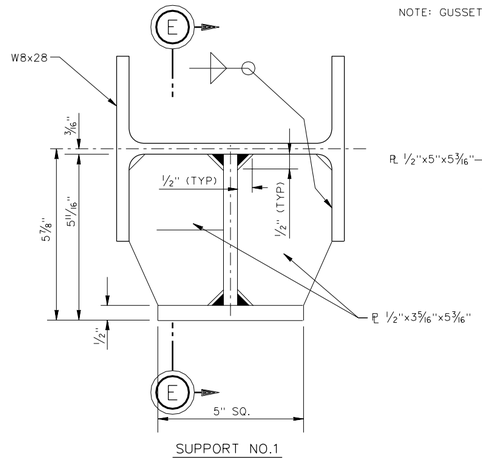

SUPPORT NO.1
SCALE: "B"
9-NOS. ARE REQIRED PER BULKHEAD

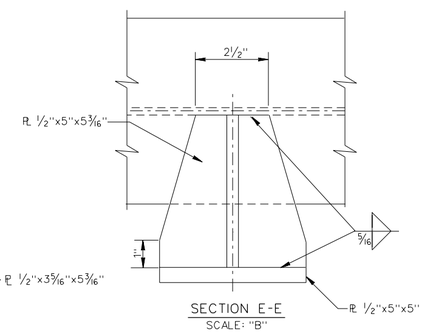

SECTION E-E
SCALE: "B"

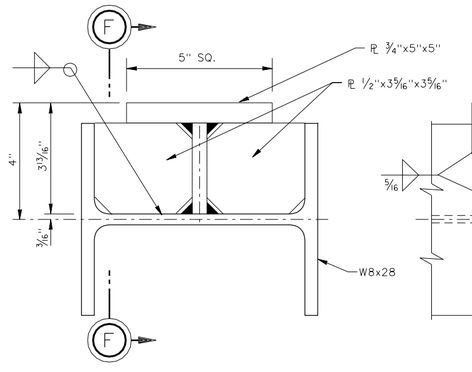

SUPPORT NO.2
SCALE: "B"
9-NOS. ARE REQIRED PER BULKHEAD

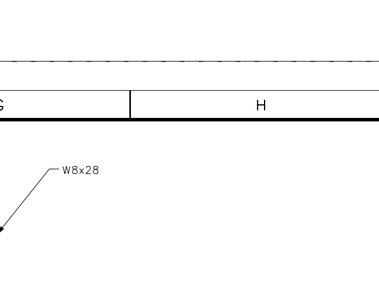

SECTION F-F
SCALE: "B"

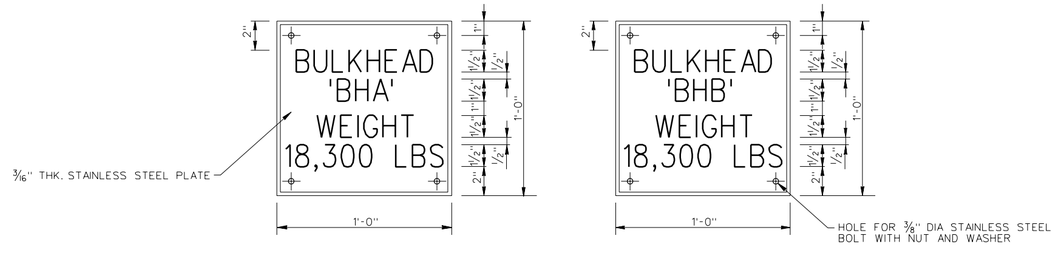

BULKHEAD SIGNS
SCALE: "A"
2 - NOS. REQD. PER BULKHEAD

NOTES:

1. FOR GENERAL NOTES REFER DWG 1/2.
2. FOR LOCATION OF DETAILS 1, 2 AND 3 REFER DWG 1/2.
3. WEIGHT SHOWN ON THE BULKHEAD SIGNS ARE THE ESTIMATED WEIGHT. ACTUAL WEIGHT SHALL BE SHOWN AFTER FINAL ASSEMBLY.

"A" 1' 9" 6" 3" 0 1'
"B" 0 3" 6"

US Army Corps of Engineers
Jacksonville District

SAFETY ON THIS JOB DEPENDS ON YOU

No.	Symbol	Zone	Description	Approved
5	A	A-2,3 B-2,3	REVISED TO ACCOMPANY AMENDMENT NO 0001	

DEPARTMENT OF THE ARMY
JACKSONVILLE DISTRICT, CORPS OF ENGINEERS
JACKSONVILLE, FLORIDA

Inv. No.
Scale: AS SHOWN
Designed by: W.J.G.
Dwn by: E.E.B
Ckd by: L.B.T.
D.W.P
Date: OCT 2000
D.O.FILE NO. 400-38,112

File name: LKDB0106.DGN
Reference files: LKDBBRDR.DGN

CENTRAL AND SOUTHERN FLORIDA PROJECT
FOR FLOOD CONTROL AND OTHER PURPOSES
PORT MAYACA AND W.P. FRANKLIN LOCKS
DEWATERING BULKHEADS
GENERAL
SECTIONS AND DETAILS

DRAWING NO.
1/6

.../Structures/lkdb0106.dgn 12/21/2001 08:28:52 AM