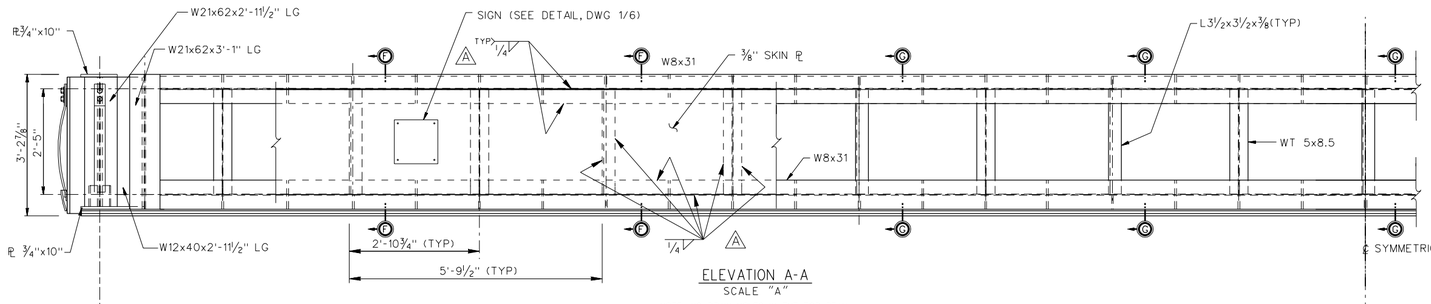

ELEVATION A-A
SCALE "A"

NOTE: NO DRAIN HOLES IN THE TOP BEAM

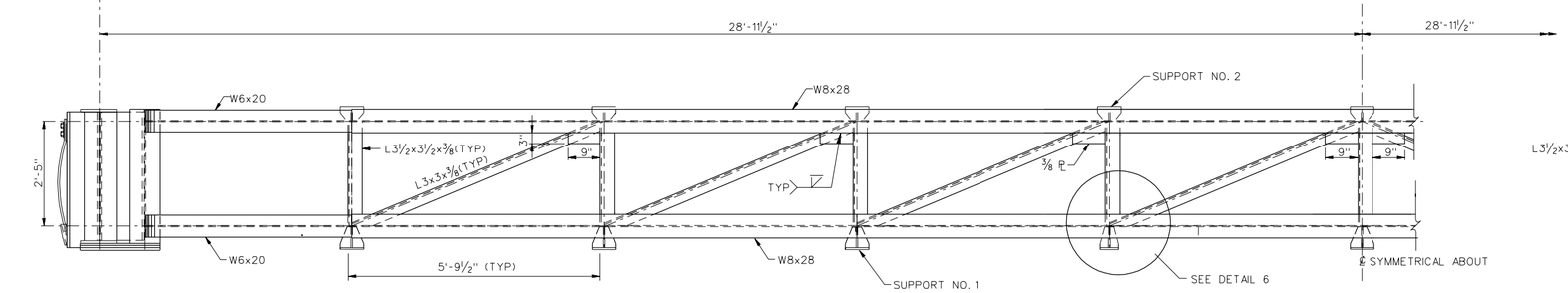

ELEVATION B-B
SCALE "A"

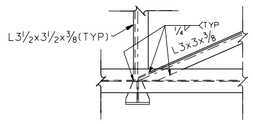

DETAIL 6 (TYP)
SCALE "A"

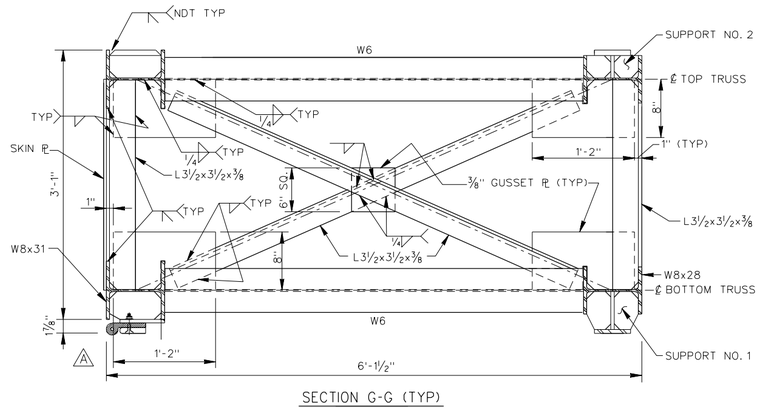

SECTION G-G (TYP)
SCALE "B"

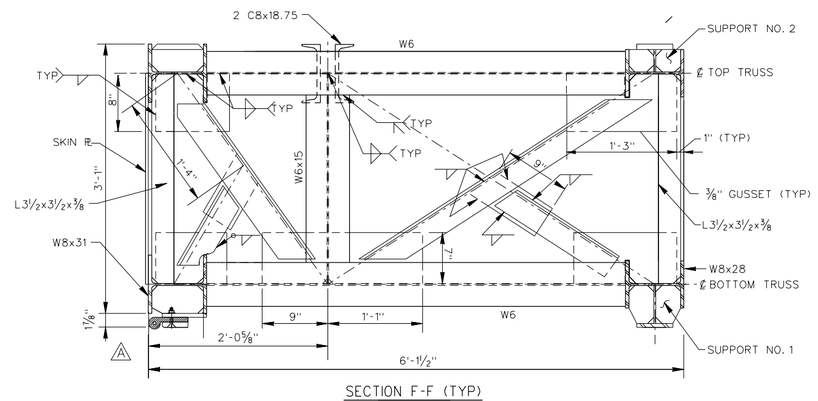

SECTION F-F (TYP)
SCALE "B"

NOTE: ALL ANGLES L3½x3½x⅜

NOTES

1. FOR BULKHEAD NOTES SEE DWG NO 1/2.
2. FOR LOCATION OF ELEVATIONS A-A AND B-B SEE DWG NO 1/3.

GRAPHIC SCALES

"A" 12" 0 1' 2' 3'

"B" 1' 9" 6" 3" 0 1'

US Army Corps of Engineers
Jacksonville District

SAFETY ON THIS JOB DEPENDS ON YOU

No.	Symbol	Zone	Description	Approved
4	4	B-2&3	REVISED TO ACCOMPANY AMENDMENT NO 0001	

DEPARTMENT OF THE ARMY
JACKSONVILLE DISTRICT, CORPS OF ENGINEERS
JACKSONVILLE, FLORIDA

Designed by: L.B.T.
Dwn by: D.W.P.
Ckd by: L.B.T.
E.E.B
Inv. No.
Scale: AS SHOWN
Date: OCT 2000
D.O.FILE NO. 400-38,112

File name: LKDB0104.DGN
Reference files: LKDBBRDR.DGN

CENTRAL AND SOUTHERN FLORIDA PROJECT
FOR FLOOD CONTROL AND OTHER PURPOSES
PORT MAYACA AND W.P. FRANKLIN LOCKS
DEWATERING BULKHEADS
GENERAL
PLANS AND SECTIONS

DRAWING NO.
1/4