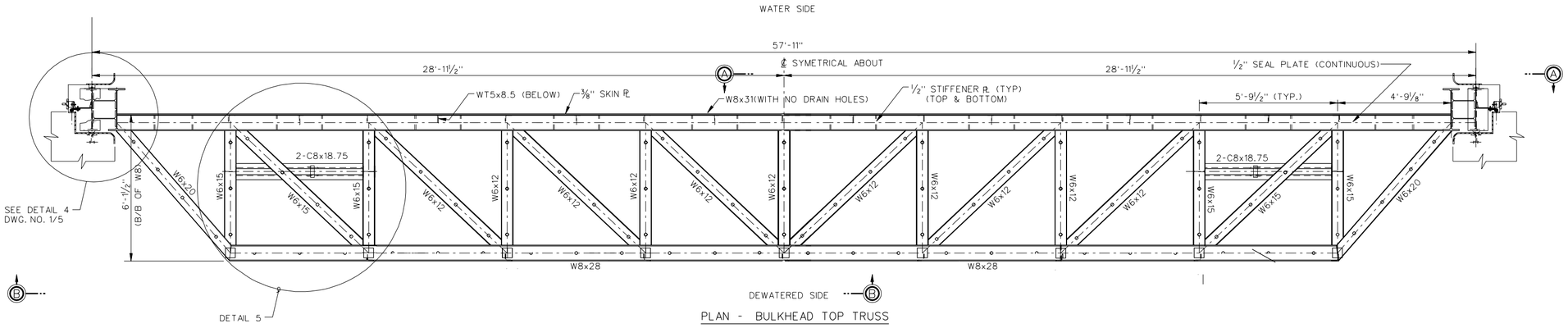

PLAN - BULKHEAD TOP TRUSS

SCALE: "A"

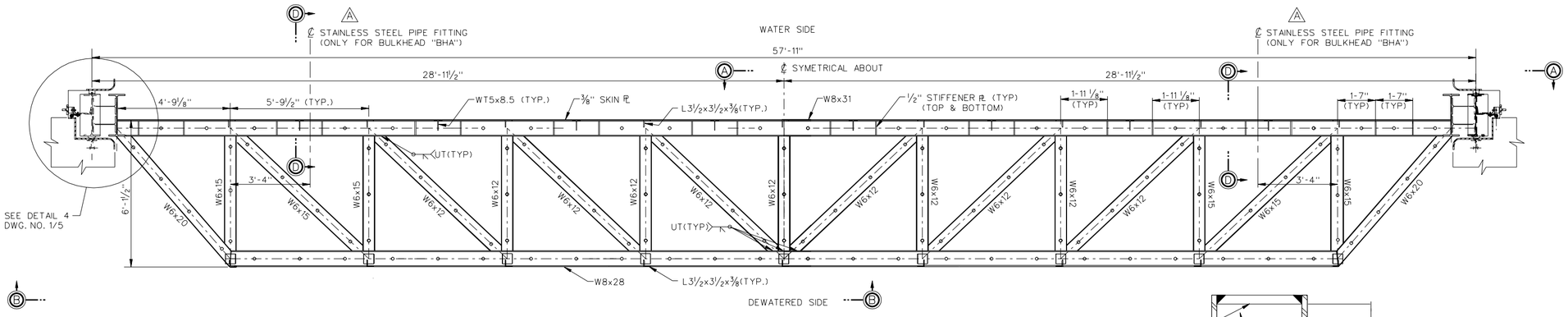

PLAN - BULKHEAD BOTTOM TRUSS AS NOTED

SCALE: "A"

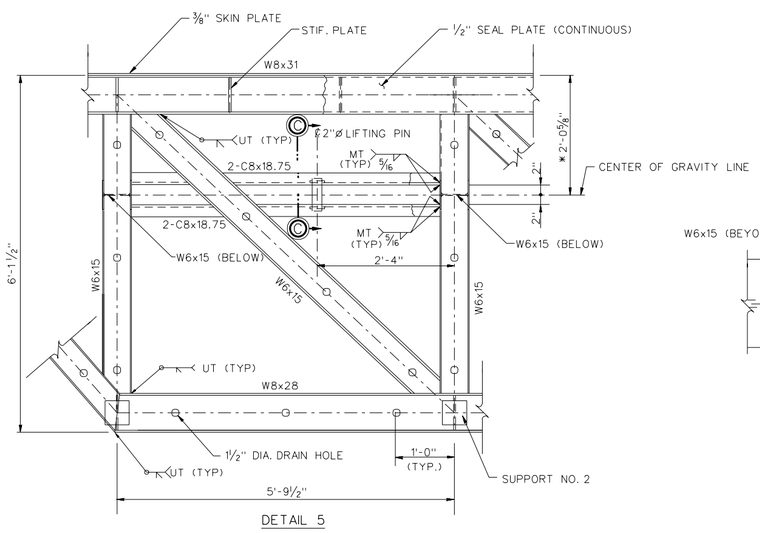

DETAIL 5

SCALE: "B"

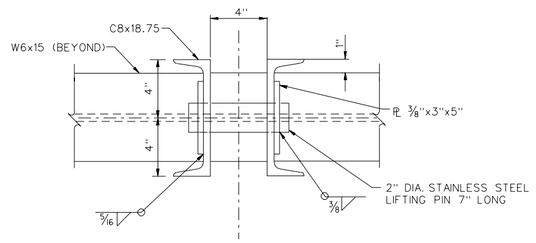

SECTION C-C

SCALE: "C"

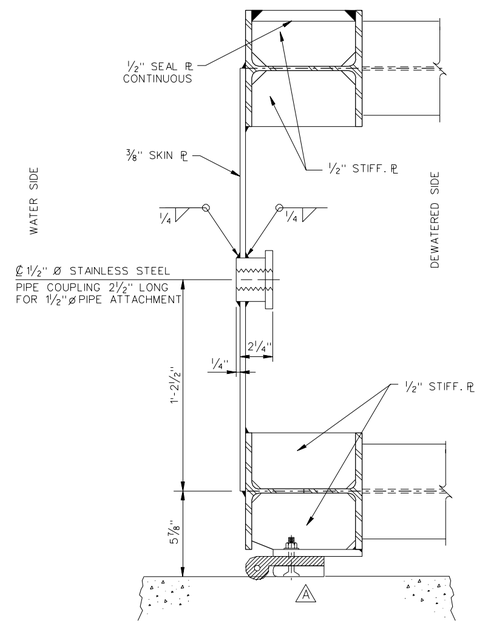

SECTION D-D

SCALE: "C"

GRAPHIC SCALE

"A" 2' 1' 0 2' 4'

"B" 1' 0 1' 2'

"C" 0 3" 6" 9" 1'

NOTE: * LOCATION OF CENTER OF GRAVITY: - THE DIMENSION SHOWN ON SECTION LOCATES A COMPUTED CENTER OF GRAVITY. EACH COMPLETELY FABRICATED BULKHEAD UNIT SHALL BE SUSPENDED TO DETERMINE ITS CENTER OF GRAVITY. IF THE CENTER OF GRAVITY SO DETERMINED, DOES NOT AGREE WITH THE CENTER OF GRAVITY SHOWN, WEIGHTS SHOULD BE ADDED TO THE UNIT AS TO MOVE THE ACTUAL CENTER OF GRAVITY TO THE LOCATION SHOWN WITH AN ACCEPTABLE TOLERANCE OF ±1".

NOTES:

1. FOR BULKHEAD NOTES SEE DWG. NO. 1/2.
2. FOR ELEVATIONS A-A AND B-B SEE DWG. NO. 1/4.

US Army Corps of Engineers
Jacksonville District

SAFETY ON THIS JOB DEPENDS ON YOU

No.	Symbol	Date	Zone	Description	Approved
3	A	9-6-01		REVISED TO ACCOMPANY AMENDMENT NO 0001	

DEPARTMENT OF THE ARMY
JACKSONVILLE DISTRICT, CORPS OF ENGINEERS
JACKSONVILLE, FLORIDA

Designed by: LDB
Date by: D.W.P.
Civil by: L.B.T.
E.E.B.
Inv. No.
Scale: AS SHOWN
Dates: OCT 2000
D.O.FILE NO. 400-38,112

File name: LKDB0103.DGN
Reference files: LKDBBRDR.DGN

CENTRAL AND SOUTHERN FLORIDA PROJECT
FOR FLOOD CONTROL AND OTHER PURPOSES
PORT MAYACA AND W.P. FRANKLIN LOCKS
DEWATERING BULKHEADS
GENERAL
TOP AND BOTTOM TRUSS PLANS

DRAWING NO.
1/3