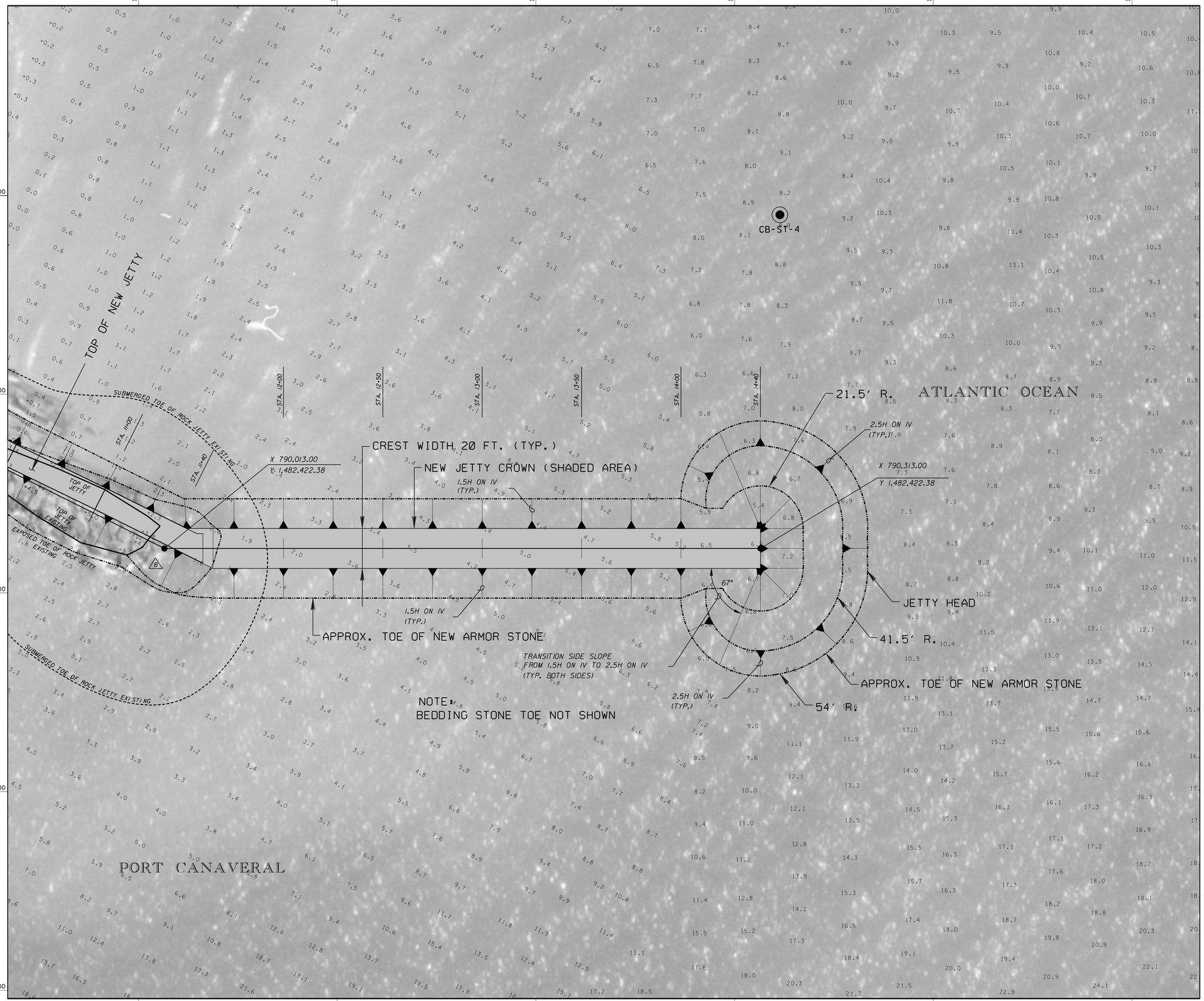

N

GRAPHIC SCALE

20' 0 20' 40'

US Army Corps of Engineers
Jacksonville District

SAFETY ON THIS JOB DEPENDS ON YOU

No.	Symbol	Zone	Description	Approved
1	B	B-3	Revised to Accompany Amendment No. 0004	
6	A	—	Revised to Accompany Amendment No. 0001	

DEPARTMENT OF THE ARMY
JACKSONVILLE DISTRICT, CORPS OF ENGINEERS
JACKSONVILLE, FLORIDA

Designed by: A.C.K.
Dwn by: R.L.H.
Ckd by: J.W.B.
F.B.S.
Inv. No.
Dated:
Scale:
Plot date:
Plot scale:
Dated: MAY 2002
D.O.FILE NO. 11-38,304

File name: D108SH06.DGN
Reference files: CANJETBRDR.DGN D108SH1.DGN D108SH2.DGN D108TOPO.DGN D108CONT.DGN D108SH02.DGN D108RDCK.DGN D108VEG.DGN D108JETP.DGN G108SH06.TIF

CANAVERAL HARBOR, FLORIDA
NORTH JETTY SAND TIGHTENING AND EXTENSION
JETTY IMPROVEMENTS
JETTY PLAN

DRAWING NO.
2/5

.../contract/d108sh06.dgn 10/22/2002 11:16:38 AM

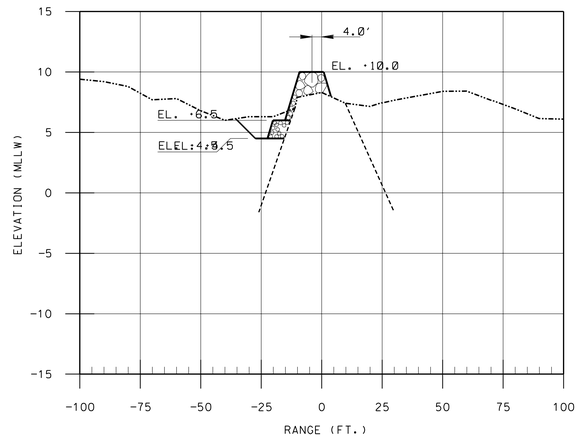

STA. 2+00

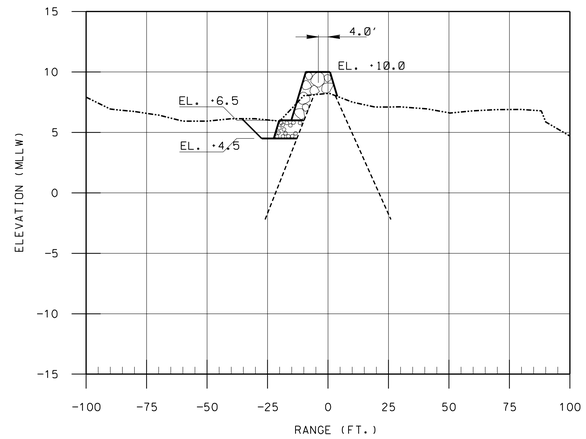

STA. 2+50

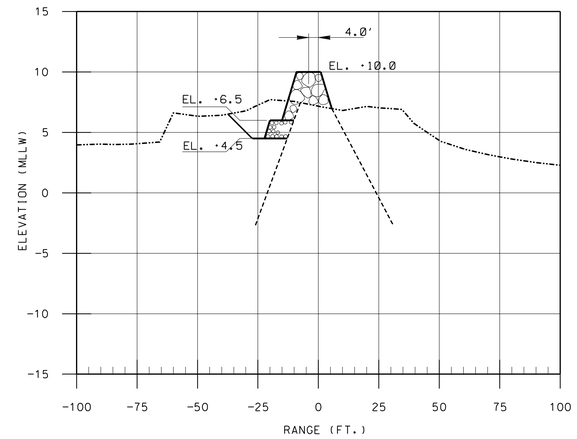

STA. 3+00

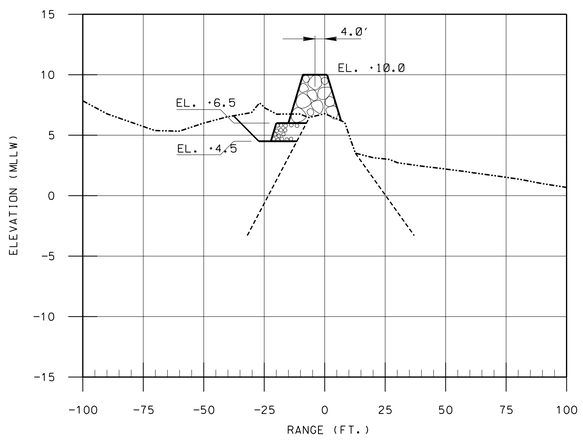

STA. 3+50

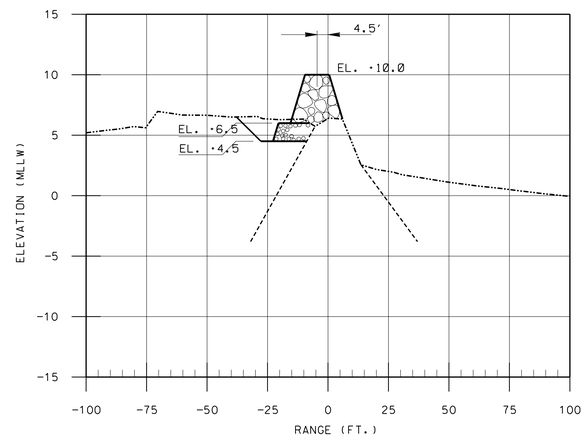

STA. 4+00

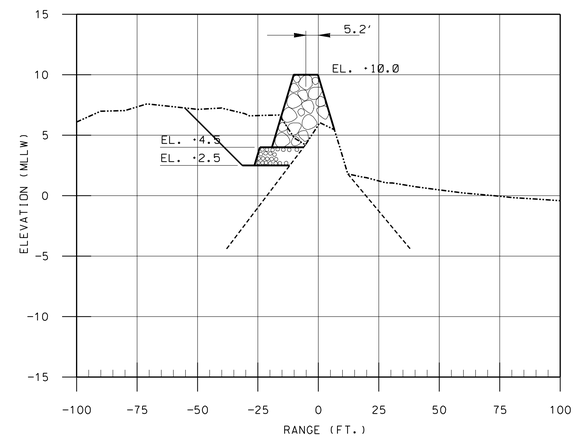

STA. 4+50

CROSS SECTION NOTES:

1. FOR TYPICAL CROSS SECTIONS DETAIL, SEE DWG. NO. 2/10.
2. FOR SIDE SLOPES AND CREST WIDTH, SEE DWG. NO. 2/10.
3. SURVEY BASELINE IS RANGE 0.0 (FT.)
4. STONE SIZE SHOWN ARE FOR GRAPHICAL CLARITY PURPOSE ONLY. SEE SPECIFICATIONS FOR GRADATIONS.
5. ALL CROSS SECTIONS SHOWN ARE "LOOKING EAST".
6. SAND TIGHTENING DETAILS NOT SHOWN FOR CLARITY.

LEGEND:

SURVEY 02-108

SUBMERGED JETTY

GRAPHIC SCALES

HORZ. 25' 0 25' 50'

VERT. 5' 0 5' 10'

US Army Corps of Engineers
Jacksonville District

SAFETY ON THIS JOB DEPENDS ON YOU

No.	Symbol	Zone	Description	Approved
1	6	H-1	REVISED TO ACCOMPANY AMENDMENT NO. 0004	

DEPARTMENT OF THE ARMY
JACKSONVILLE DISTRICT, CORPS OF ENGINEERS
JACKSONVILLE, FLORIDA

Inv. No.
Dated:
Scale: AS SHOWN
Plot date:
Plot scale:

Designed by: A.C.K.
Dwn by: R.L.H.
Ckd by: J.W.B.

Dated: MAY 2002
D.O.FILE NO. 11-38,304

File name: CANLETX51.DGN
Reference files: CANLETBRDR.DGN

CANAVERAL HARBOR, FLORIDA
NORTH JETTY SAND TIGHTENING AND EXTENSION
JETTY IMPROVEMENTS
CROSS SECTIONS
STA. 2+00 THRU STA. 4+50

DRAWING NO.
2/6

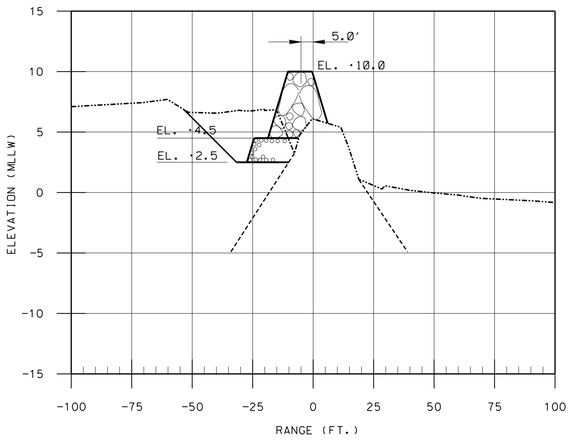

STA. 5+00

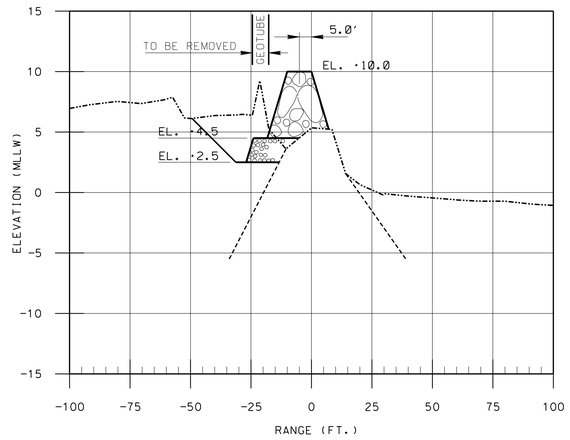

STA. 5+50

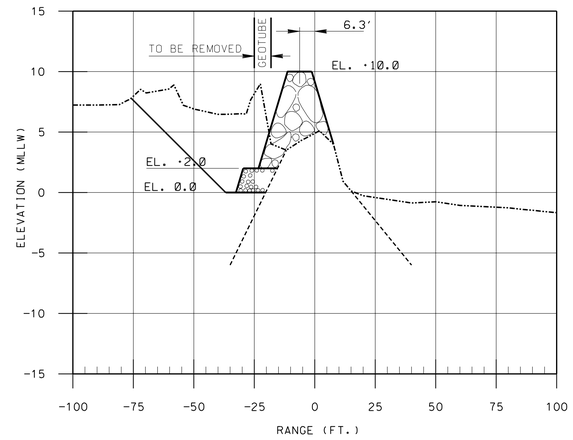

STA. 6+00

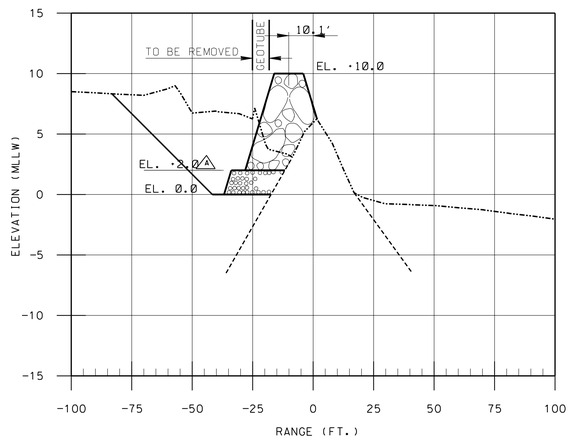

STA. 6+50

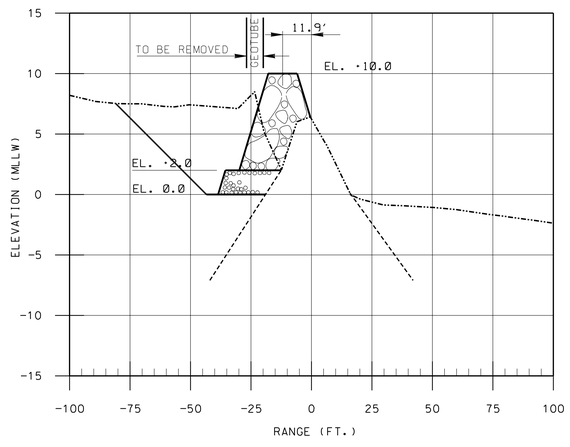

STA. 7+00

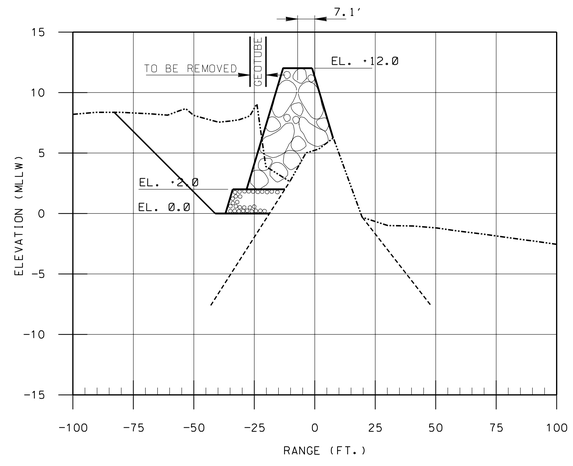

STA. 7+50

CROSS SECTION NOTES:

1. FOR TYPICAL CROSS SECTIONS DETAIL, SEE DWG. NO. 2/10.
2. FOR SIDE SLOPES AND CREST WIDTH, SEE DWG. NO. 2/10.
3. SURVEY BASELINE IS RANGE 0.0 (FT.)
4. STONE SIZE SHOWN ARE FOR GRAPHICAL CLARITY PURPOSE ONLY. SEE SPECIFICATIONS FOR GRADATIONS.
5. ALL CROSS SECTIONS SHOWN ARE "LOOKING EAST".
6. SAND TIGHTENING DETAILS NOT SHOWN FOR CLARITY.

LEGEND:

SURVEY 02-108

SUBMERGED JETTY

GRAPHIC SCALES

HORZ. 25' 0 25' 50'

VERT. 5' 0 5' 10'

US Army Corps of Engineers
Jacksonville District

SAFETY ON THIS JOB DEPENDS ON YOU

No.	Symbol	Zone	Description	Approved
1	4	H-1	REVISED TO ACCOMPANY AMENDMENT NO. 0004	
1	3	B-3	REVISED TO ACCOMPANY AMENDMENT NO. 0001	

DEPARTMENT OF THE ARMY
JACKSONVILLE DISTRICT, CORPS OF ENGINEERS
JACKSONVILLE, FLORIDA

Inv. No.
Dated:
Scale: AS SHOWN
Plot date:
Plot scale:

Designed by: A.C.K.
Dwn by: R.L.K.
Ckd by: J.W.B.

Dated: MAY 2002
D.O.FILE NO. 11-38,304

File name: CANJETXS2.DGN
Reference files: CANJETBRDR.DGN

CANAVERAL HARBOR, FLORIDA
NORTH JETTY SAND TIGHTENING AND EXTENSION
JETTY IMPROVEMENTS
CROSS SECTIONS
STA. 5+00 THRU STA. 7+50

DRAWING NO.
2/7

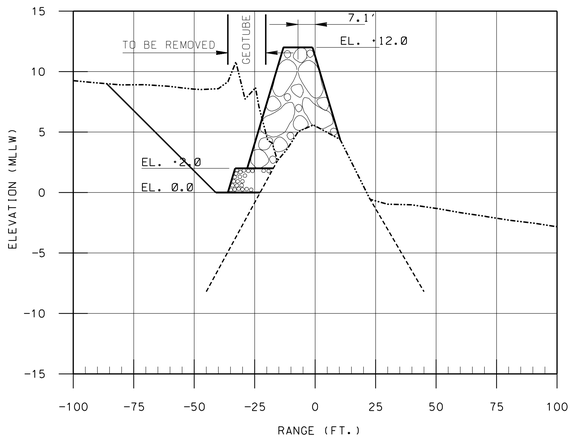

STA. 8+00

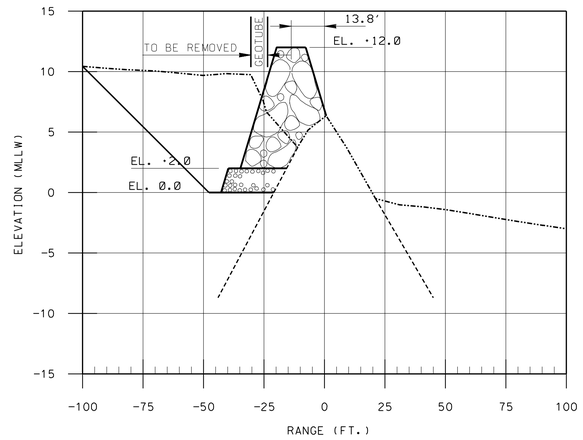

STA. 8+50

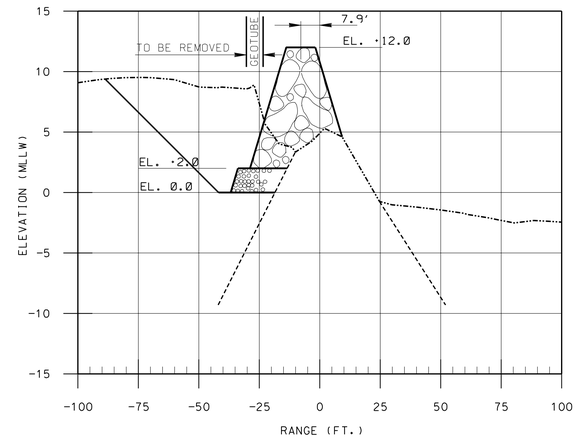

STA. 9+00

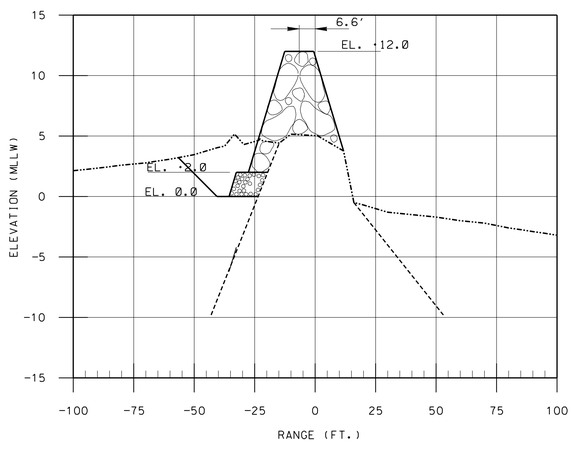

STA. 9+50

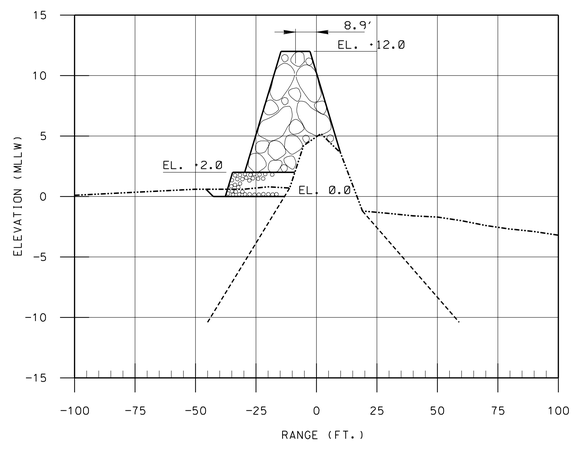

STA. 10+00

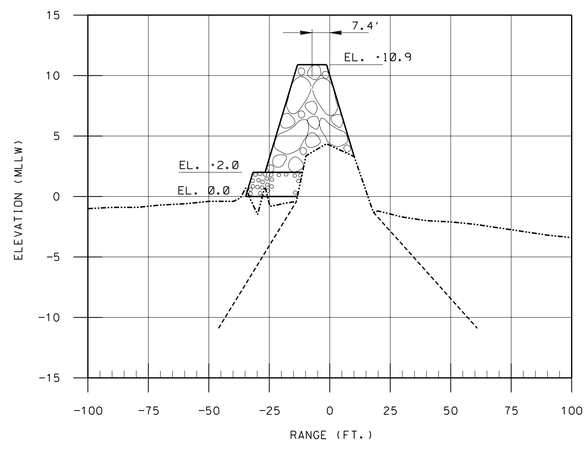

STA. 10+50

CROSS SECTION NOTES:

1. FOR TYPICAL CROSS SECTIONS DETAIL, SEE DWG. NO. 2/10.
2. FOR SIDE SLOPES AND CREST WIDTH, SEE DWG. NO. 2/10.
3. SURVEY BASELINE IS RANGE 0.0 (FT.)
4. STONE SIZE SHOWN ARE FOR GRAPHICAL CLARITY PURPOSE ONLY. SEE SPECIFICATIONS FOR GRADATIONS.
5. ALL CROSS SECTIONS SHOWN ARE "LOOKING EAST".
6. SAND TIGHTENING DETAILS NOT SHOWN FOR CLARITY.

LEGEND:

SURVEY 02-108

SUBMERGED JETTY

GRAPHIC SCALES

HORZ. 25' 0 25' 50'

VERT. 5' 0 5' 10'

US Army Corps of Engineers
Jacksonville District

SAFETY ON THIS JOB DEPENDS ON YOU

No.	Symbol	Zone	Description	Approved
1	A	H-1	REVISED TO ACCOMPANY AMENDMENT NO. 0004	

DEPARTMENT OF THE ARMY
JACKSONVILLE DISTRICT, CORPS OF ENGINEERS
JACKSONVILLE, FLORIDA

Designed by: A.C.K.
Dwn by: R.L.H.
Ckd by: J.W.B.
Inv. No.
Date:
Scale: AS SHOWN
Plot date:
Plot scale:
File name: CANJETX33.DGN
Reference files: CANJETBRDR.DGN
Dated: MAY 2002
D.O.FILE NO. 11-38,304

CANAVERAL HARBOR, FLORIDA
NORTH JETTY SAND TIGHTENING AND EXTENSION
JETTY IMPROVEMENTS
CROSS SECTIONS
STA. 8+00 THRU STA. 10+50

DRAWING NO.
2/8

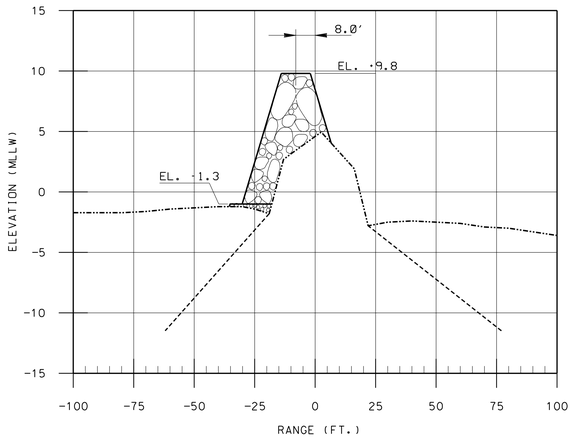

STA. 11+00

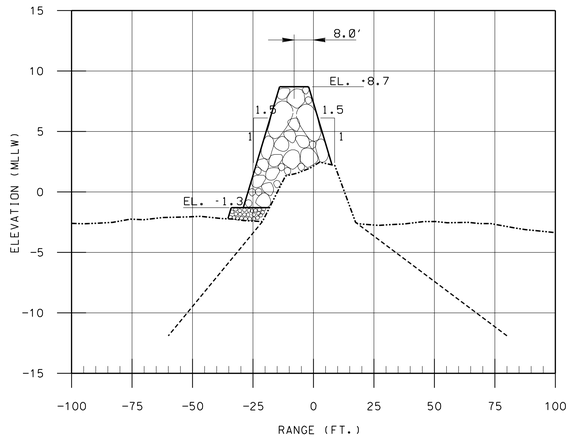

STA. 11+40

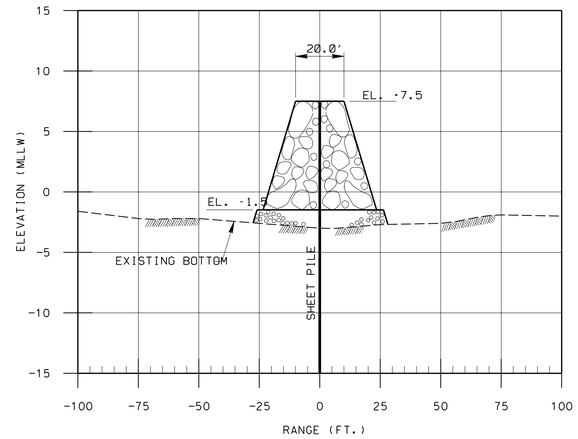

STA.12+00

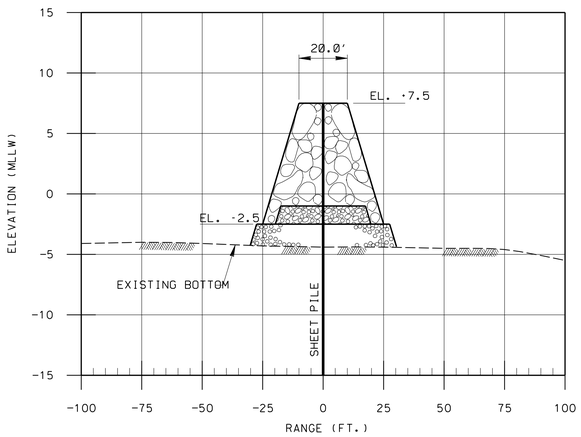

STA. 13+00

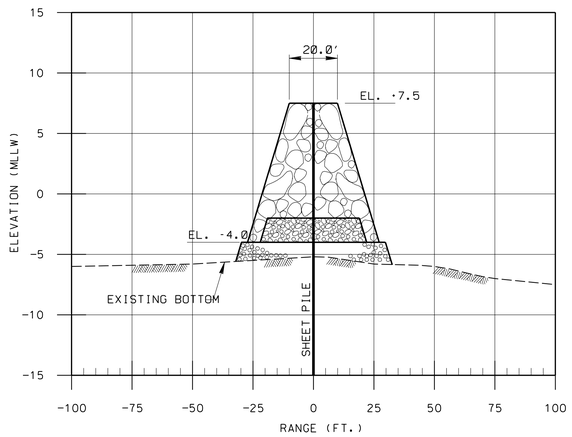

STA. 14+00

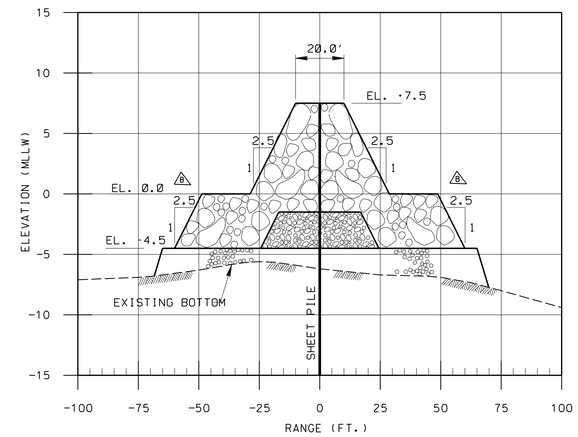

STA. 14+40

CROSS SECTOIN NOTES:

1. FOR TYPICAL CROSS SECTIONS DETAIL, SEE DWG. NO. 2/10.
2. FOR SIDE SLOPES AND CREST WIDTH, SEE DWG. NO. 2/10.
3. SURVEY BASELINE IS RANGE 0.0 (FT.)
4. STONE SIZE SHOWN ARE FOR GRAPHICAL CLARITY PURPOSE ONLY. SEE SPECIFICATIONS FOR GRADATIONS.
5. ALL CROSS SECTIONS SHOWN ARE "LOOKING EAST".
6. SAND TIGHTENING DETAILS NOT SHOWN FOR CLARITY.

LEGEND:

SURVEY 02-108

SUBMERGED JETTY

GRAPHIC SCALES

HORZ. 25' 0 25' 50'

VERT. 5' 0 5' 10'

US Army Corps of Engineers
Jacksonville District

SAFETY ON THIS JOB DEPENDS ON YOU

No.	Symbol	Zone	Description	Approved
3	3	—	REVISED TO ACCOMPANY AMENDMENT NO. 0004.	

DEPARTMENT OF THE ARMY
JACKSONVILLE DISTRICT, CORPS OF ENGINEERS
JACKSONVILLE, FLORIDA

Designed by: A.C.V.
Dwn by: R.L.H.
Ckd by: J.W.B.
Inv. No.
Dated:
Scale: AS SHOWN
Plot date:
Plot scale:

File name: CANJETXS1.DGN
Reference files: CANJETBRGR.DGN

Dated: MAY 2002
D.O.FILE NO. 11-38,304

CANAVERAL HARBOR, FLORIDA
NORTH JETTY SAND TIGHTENING AND EXTENSION
JETTY IMPROVEMENTS
CROSS SECTIONS
STA. 11+00 THRU STA. 14+40

DRAWING NO.
2/9

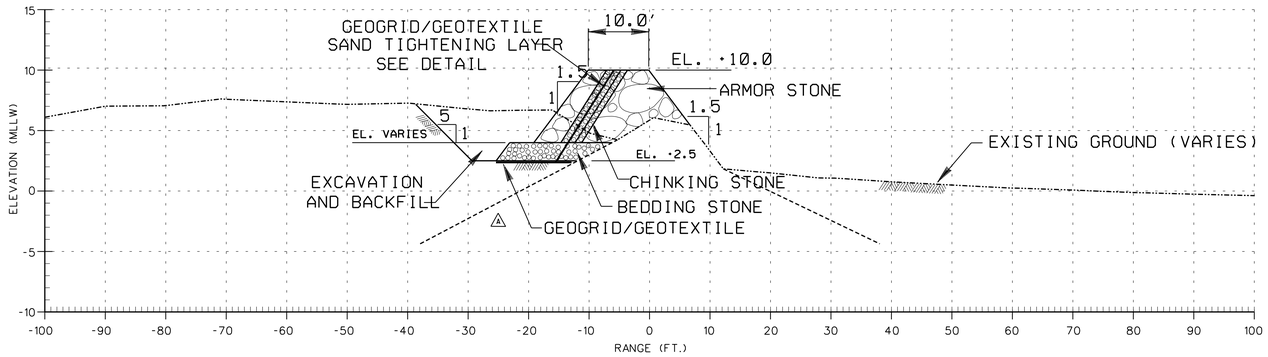

PROPOSED TYPICAL SECTIONS

STA. 2+50 THRU STA. 6+00

SCALE "A" (HORIZ.)
SCALE "B" (VERT.)

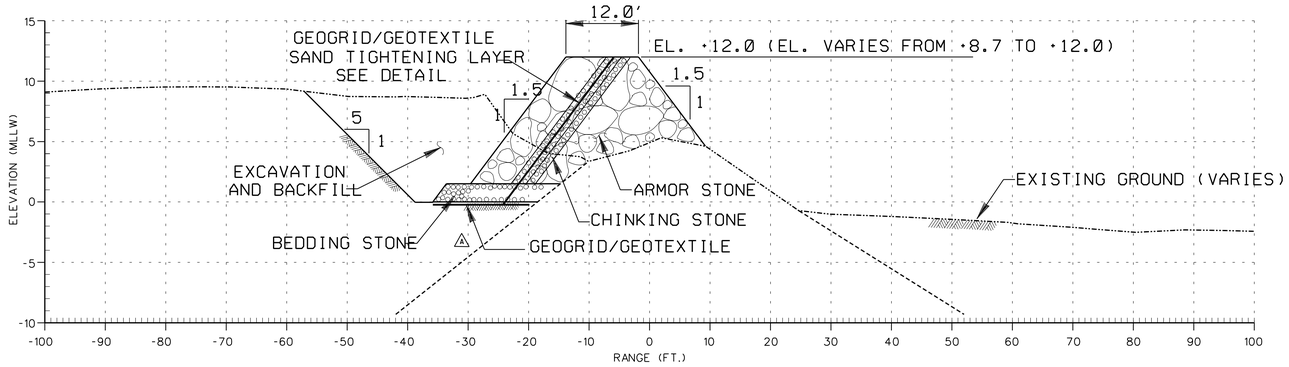

PROPOSED TYPICAL SECTIONS

STA. 6+00 THRU STA. 11+40

SCALE "A" (HORIZ.)
SCALE "B" (VERT.)

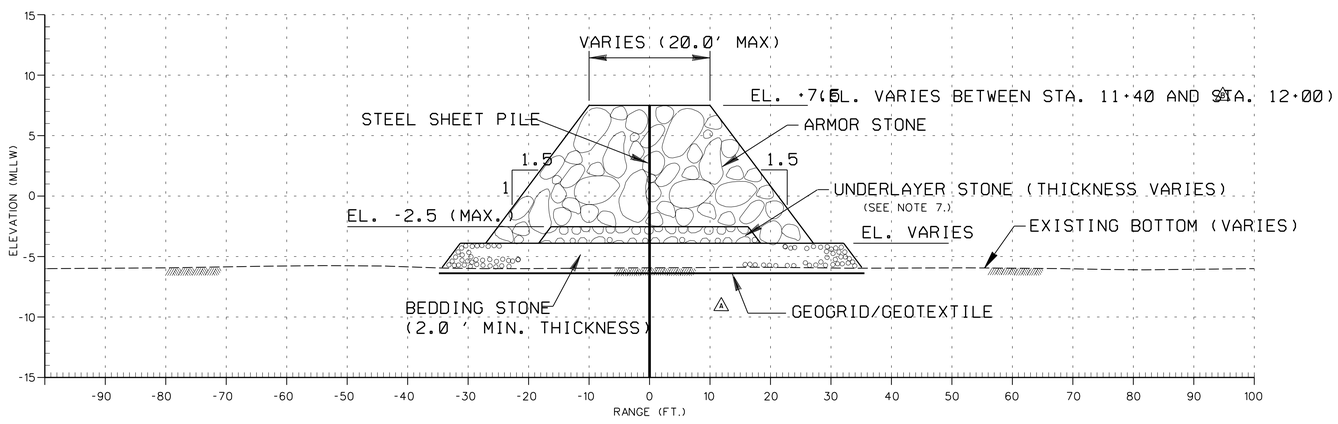

PROPOSED TYPICAL SECTIONS

STA. 11+40 THRU STA. 14+00

SCALE "A" (HORIZ.)
SCALE "B" (VERT.)

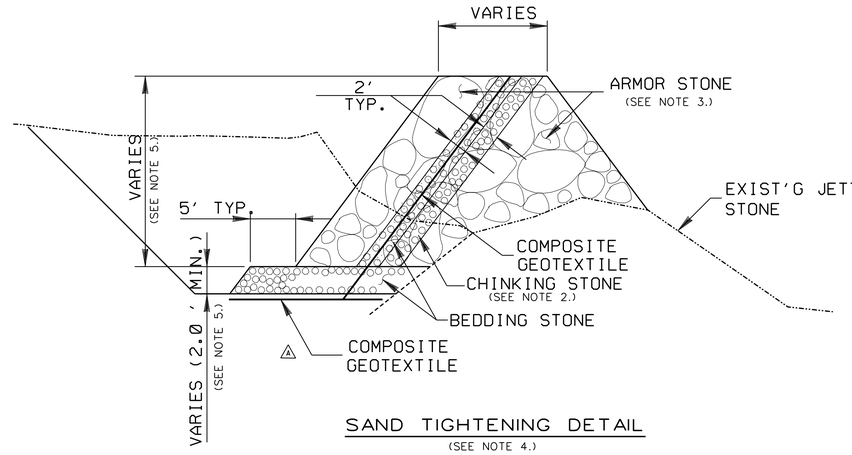

SAND TIGHTENING DETAIL

(SEE NOTE 4.)

NOTES:

1. DEPICTION OF ARMOR STONE, UNDERLAYER STONE AND BEDDING STONE IS FOR GRAPHICAL PURPOSE ONLY. SEE SPECIFICATIONS FOR REQUIRED GRADATIONS OF RESPECTIVE STONE LAYERS.
2. CHINKING STONE SHALL BE PLACED WITHIN THE ARMOR STONE TO PREVENT LOSS OF BEDDING STONE THROUGH JETTY. BEDDING STONE SHALL BE PLACED ON CHINKING STONE TO PROVIDE UNIFORM BEARING FOR COMPOSITE GEOTEXTILE. SEE SPECS FOR INSTALLATION GUIDANCE AND CRITERIA.
3. ARMOR STONE ON EACH SIDE OF SAND TIGHTENING LAYER SHALL MEET GRADATION REQUIREMENTS FOR ARMOR STONE AT THAT STATION.
4. CONTRACTOR SHALL TRANSITION ALL FEATURES "LINEARLY" BETWEEN CROSS SECTIONS WHERE DIMENSIONS ARE NOT SPECIFICALLY IDENTIFIED AT THAT CROSS SECTION.
5. CONTRACTOR SHALL MINIMIZE THE BEDDING STONE LAYER THICKNESS TO INSURE A MINIMUM ARMOR STONE THICKNESS OF 2 (Dmax) STONES ABOVE THE BEDDING STONE BETWEEN STA. 4+50 AND STA. 14+40.
6. ALL CROSS SECTIONS SHOWN ARE "LOOKING EAST".
7. CONTRACTOR SHALL MINIMIZE UNDERLAYER STONE THICKNESS TO INSURE A MINIMUM OF 2 (Dmax) STONES ABOVE THE UNDERLAYER STONE.

GRAPHIC SCALES

SCALE "A" 10' 0 10' 20'

SCALE "B" 5' 0 5' 10'

US Army Corps of Engineers
Jacksonville District

SAFETY ON THIS JOB DEPENDS ON YOU

No.	Symbol	Zone	Description	Approved
2	B	—	Revised to Accompany Amendment No. 0004	
4	A	—	Revised to Accompany Amendment No. 0002	

DEPARTMENT OF THE ARMY
JACKSONVILLE DISTRICT, CORPS OF ENGINEERS
JACKSONVILLE, FLORIDA

Designed by: A.C.K.
Dwn by: R.L.H.
Ckd by: J.W.B.
Inv. No.
Dated:
Scale: AS SHOWN
Plot date:
Plot scale:

File name: CANJETXSS.DGN
Reference files: CANJETBRDR.DGN

Dated: MAY 2002
D.O.FILE NO. 11-38,304

CANAVERAL HARBOR, FLORIDA
NORTH JETTY SAND TIGHTENING AND EXTENSION
JETTY IMPROVEMENTS
CROSS SECTIONS
TYPICAL SECTIONS DETAIL

DRAWING NO.
2/10

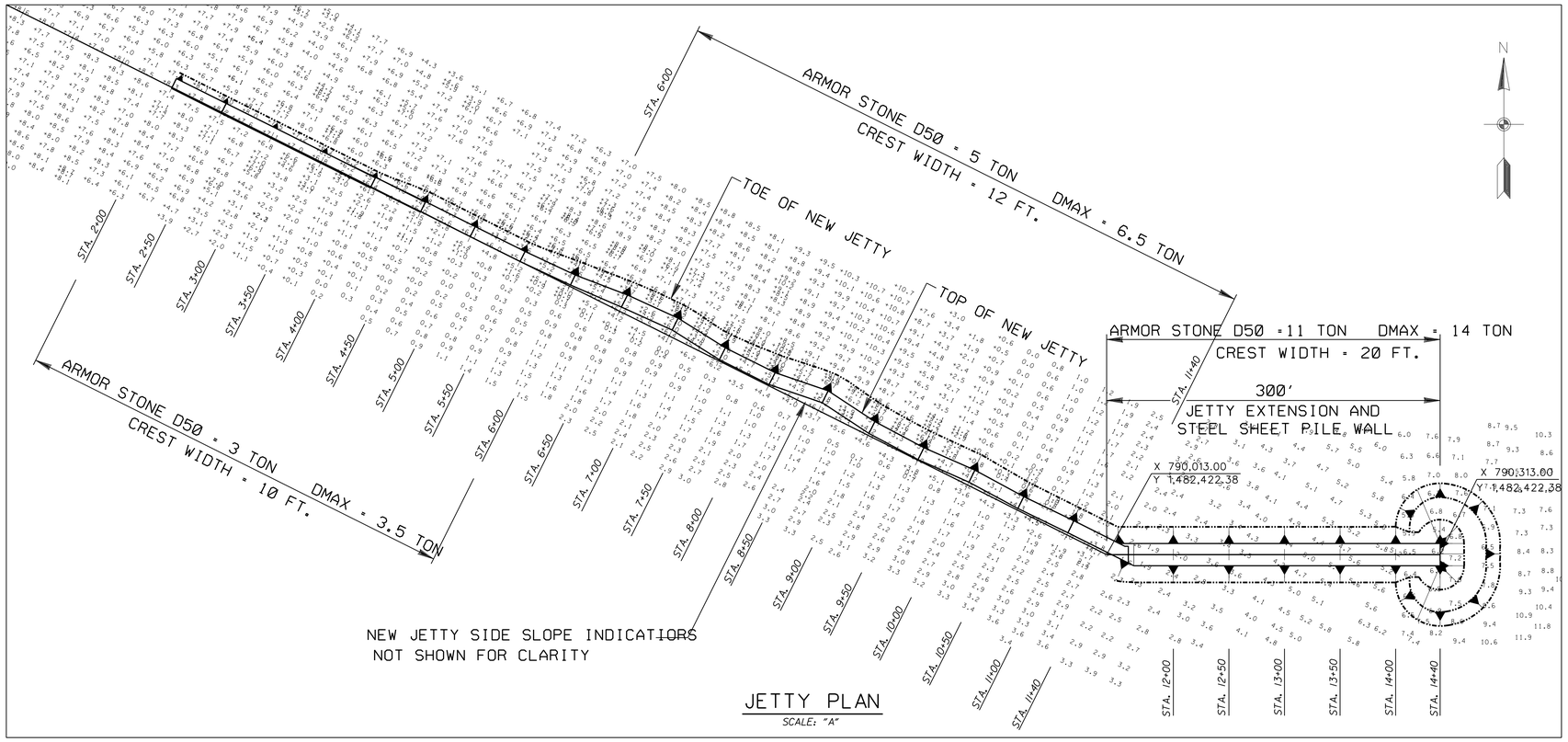

JETTY PLAN

SCALE: "A"

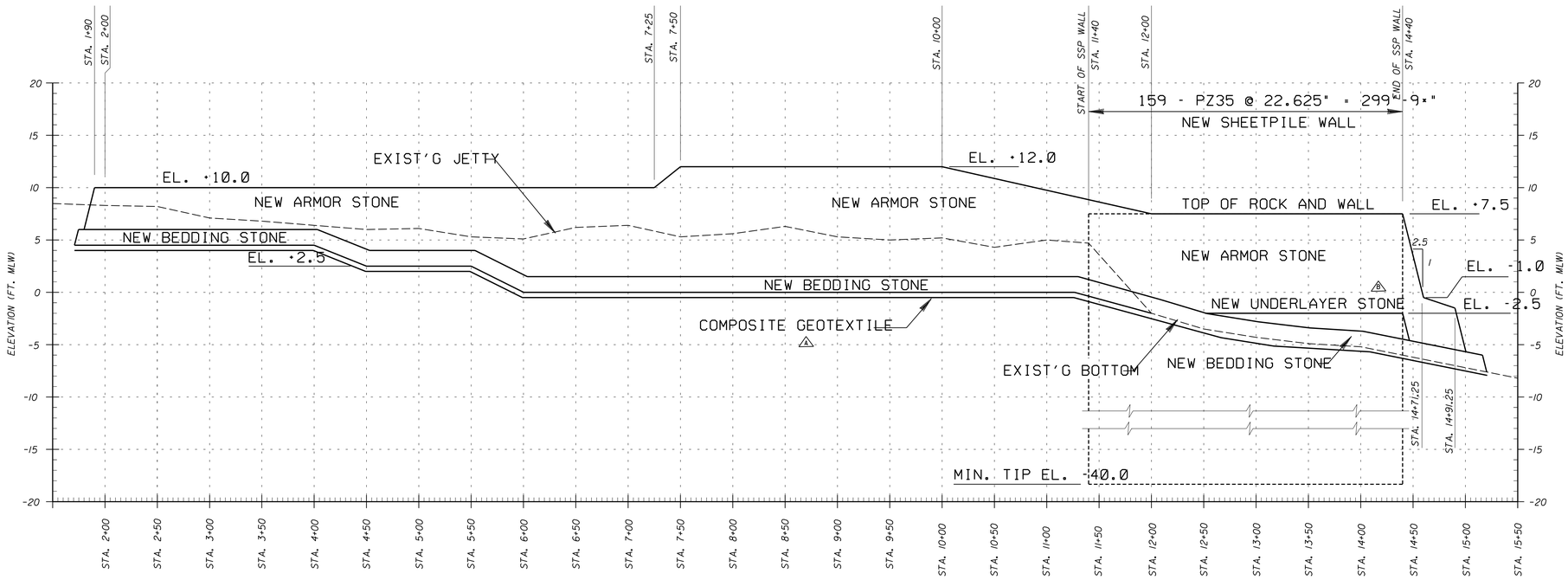

JETTY PROFILE

SCALE: "A" (HORIZ.)
SCALE: "B" (VERT.)

STEEL SHEET PILE WALL NOTES:

1. LAYOUT OF WALL SHOWN WITH PZ-35 STEEL SHEET PILE. OTHER HOT-ROLLED SECTIONS MAY BE USED. MINIMUM SECTION MODULUS REQUIRED IS 48-INCHES CUBED. MINIMUM FLANGE THICKNESS REQUIRED IS 0.50-INCH. MINIMUM WEB THICKNESS REQUIRED IS 0.48-INCH. CONTRACTOR SHALL SUBMIT LAYOUT DRAWINGS BASED ON THE ACTUAL SHEET PILE SECTIONS TO BE USED.
2. HOT-ROLLED U-SECTIONS SHALL HAVE PAIRS CRIMPED ALONG THE FULL LENGTH.
3. CONTRACTOR SHALL PAINT STEEL SHEET PILE IN ACCORDANCE WITH SPECIFICATION SECTION 09965.

GRAPHIC SCALES

"A" 50' 0 50' 100'

"B" 5' 0 5' 10'

US Army Corps of Engineers
Jacksonville District

SAFETY ON THIS JOB DEPENDS ON YOU

No.	Symbol	Zone	Description	Approved
1	B	F-2	REVISED TO ACCOMPANY AMENDMENT NO. 0004	
1	A	D-2	REVISED TO ACCOMPANY AMENDMENT NO. 0002	

DEPARTMENT OF THE ARMY
JACKSONVILLE DISTRICT, CORPS OF ENGINEERS
JACKSONVILLE, FLORIDA

Designed by: A.C.K.
Dwn by: R.L.H.
Ckd by: J.W.B.
Inv. No.
Dated:
Scale: AS SHOWN
Plot date:
Plot scale:

File name: CANJPRL.DGN
Reference files: CANJETBRDR.DGN dl08rock.dgn dl08veg.dgn consl.dgn consgn.dgn canjetp.dgn

Dated: MAY 2002
D.O.FILE NO. 11-38,304

CANAVERAL HARBOR, FLORIDA
NORTH JETTY SAND TIGHTENING AND EXTENSION
JETTY IMPROVEMENTS
JETTY PLAN AND PROFILE

DRAWING NO.
2/11

.../contract/canjprl.dgn 10/22/2002 11:14:20 AM