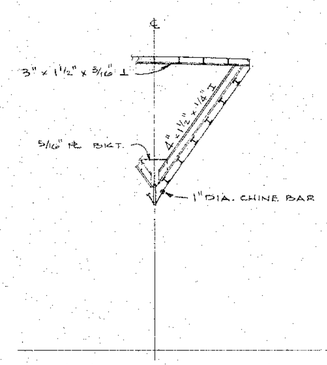

FR. 2
FRS. 1 & 3 SIMILAR

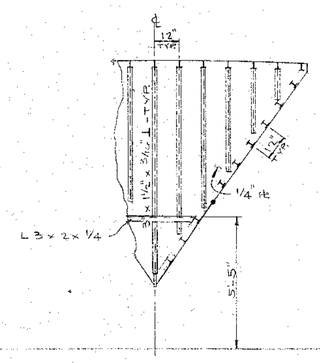

BHD. 4
LKG. FWD.

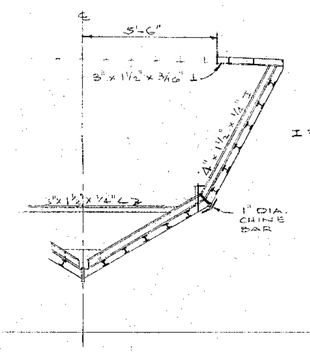

FR. 8
FRS. 3, 6, 7, 9, 10 & 11 SIMI. AB.

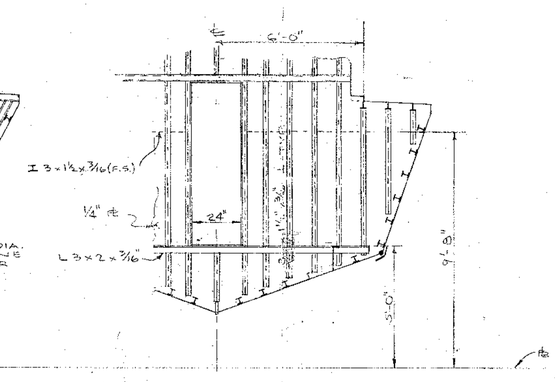

BHD. 12

NOTE: ALL SECTIONS SHOWN LOOKING AFT EXCEPT AS NOTED
SCALE 3/8" = 1'-0"

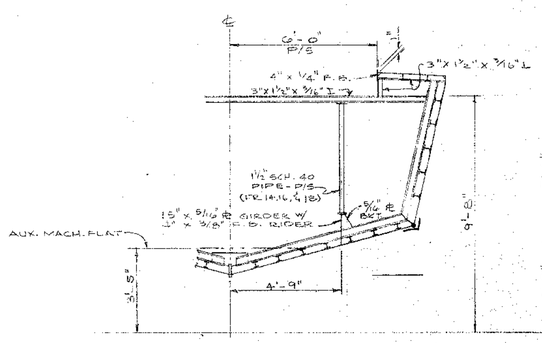

FR. 16
FRS. 13, 14, 15, 17, 18 & 19 SIMILAR

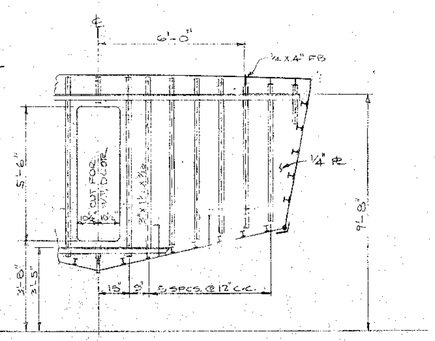

BHD. 20

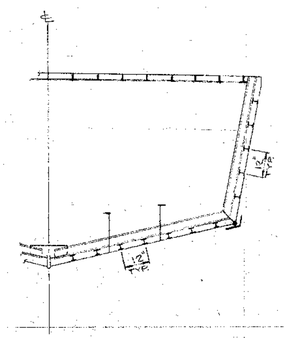

FR. 21

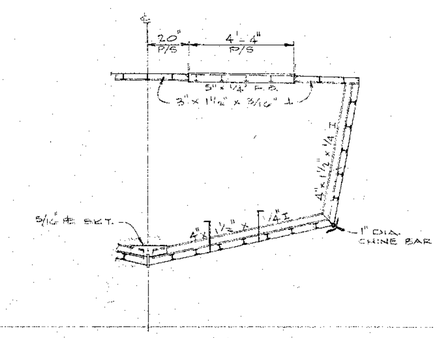

FR. 22
LKG. FWD.

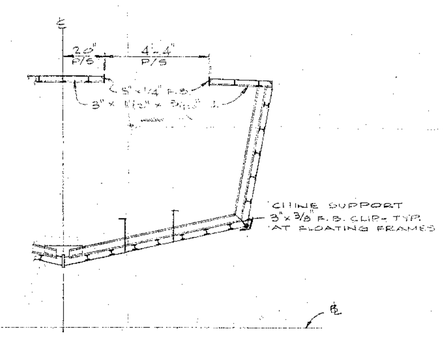

FR. 24
FRS. 23 & 25 SIMILAR

NOTE: THE OUTSIDE OF THE CHINE IS COVERED WITH A 3" X 3" X ¼" TK ANGLE

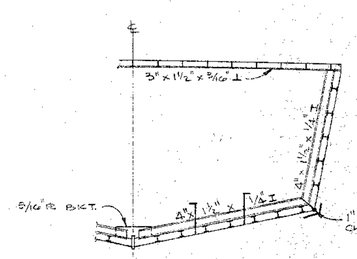

FR. 26

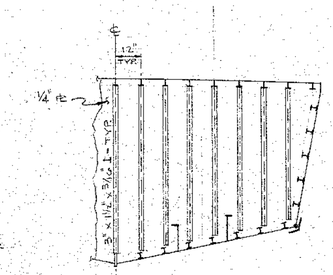

BHD. 27

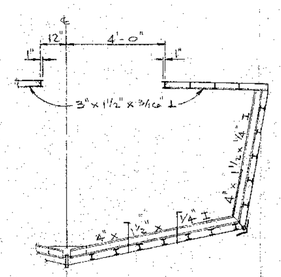

FR. 28
FR. 29 SIMILAR

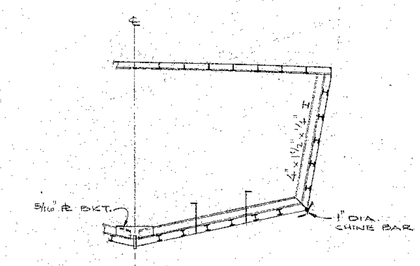

FR. 30
LKG. FWD.

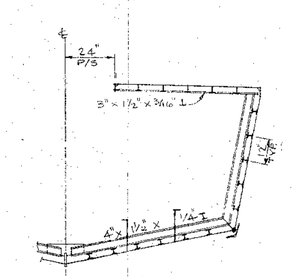

FR. 31

APPV'D BY USCG LETTER DATED 17 AUG., 1973

REV.	DESCRIPTION	BY	DATE
3	REV. FOR EDGIDE CHANGE	RK	MAY 2-73
2	REVISED PER C.O.E. LETTER DATED 9 MAY, 1973	RK	MAY 24-73
1	CHANGED BOTTOM FRMS. & FLAT HLTS.	RK	APRIL 25-73

REVISIONS

TRANSVERSE SECTIONS

65' SURVEY BOAT
I.F.B. DACW-17-73-B-0017

DEPEND-A-CRAFT
P.O. BOX 223, PIERRE PART, LA. 70339

HULL NO. 23 — 15 APRIL 73 — DWG. NO. 5-2 — REV. 3

DESIGNED BY
ROSS KRAMER
NEW ORLEANS, LA.