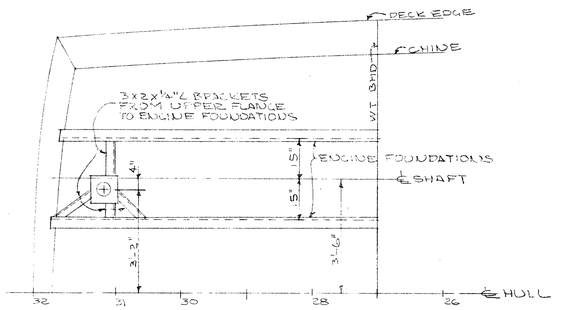

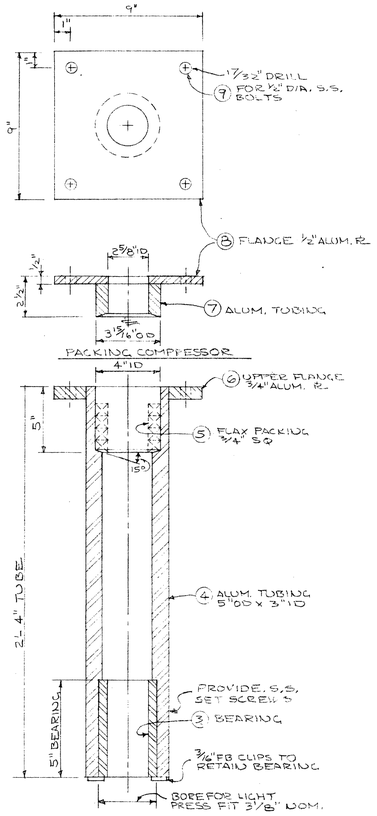

RUDDER TUBE ASSY SCALE 3"=1'-0"

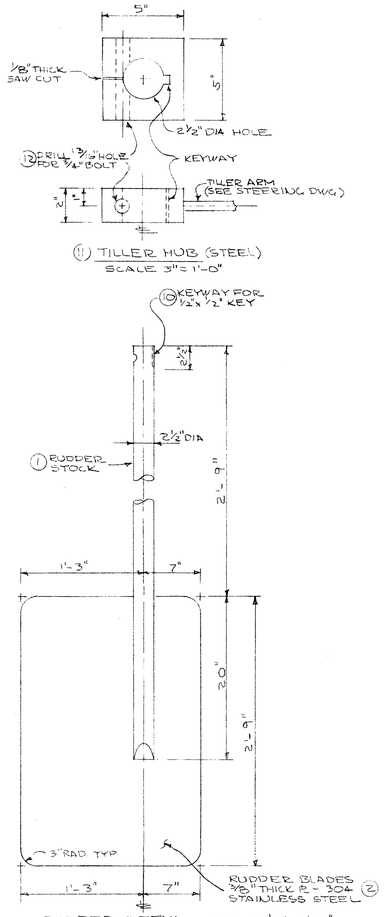

RUDDER DETAIL SCALE 1 1/2"=1'-0"

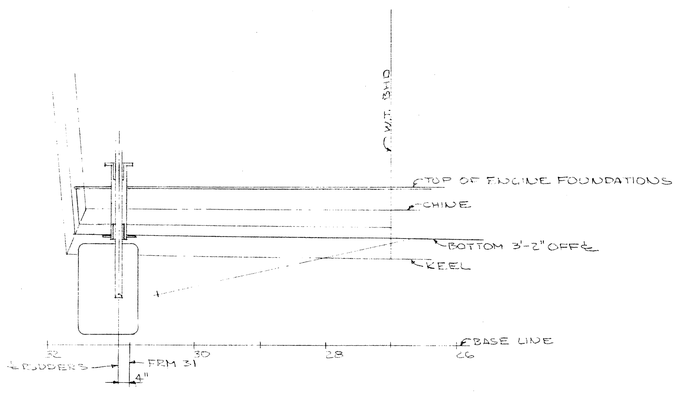

SECTION 3'-2" OFF ℄
SCALE 1/2"=1'-0"

LIST OF MATERIALS

PT NO	QTY	DESCRIPTION
1	2	RUDDER STOCKS - 2 1/2" DIA.-STAINLESS STEEL 4'-5" LONG
2	2	RUDDER BLADES - 3/8" THICK - 304 STAINLESS STEEL - 1'-10" x 2'-9"
3	2	BEARINGS - B.J. BYPLEX - 2 1/2" SHAFT - 3 1/8" OD 5" LONG (CUT FROM ONE "LAUNCE")
4	2	ALUM. TUBING - 5" OD x 3" ID - 2'-4" LONG
5	AS REQ'D	3/4" SQ. FLAX PACKING
6	2	UPPER FLANGE - 9" x 9" x 3/4" THICK ALUM. PL
7	2	ALUM. TUBING - 3 15/16" OD x 2 5/8" ID - 2" LONG
8	2	FLANGE 9" x 9" x 1/2" THICK ALUM. PL
9	8	S.S. BOLTS - 1/2" DIA. x 2 1/2" LONG
10	2	KEYSTOCK 1/2" x 1/2" - 3" LONG
11	2	TILLER HUB - 5" x 5" x 2" THICK STEEL
12	2	BOLTS SS. 3/4" DIA x 6" LONG

APPV'D BY USCG LETTER DATED 12 JUN 1973

REV	DESCRIPTION	BY	DATE
1	REVISED PER USA, [illegible] MARKED [illegible]	[illegible]	[illegible]

REVISIONS

RUDDERS

65' SURVEY BOAT
IFB DACW-17-73-C-0056

DEPEND-A-CRAFT
RFD BOX 225, PIERRE PART, LA 70339

HULL NO 23 MAY 1973 DWG NO M-2

DESIGNED BY ROSS KRAMER NEW ORLEANS, LA.

REV 1