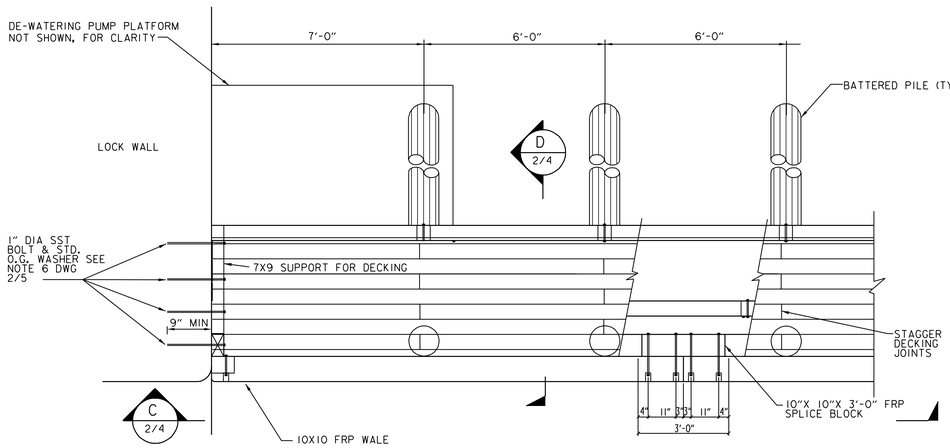

DECKING PLAN
SCALE: "B"

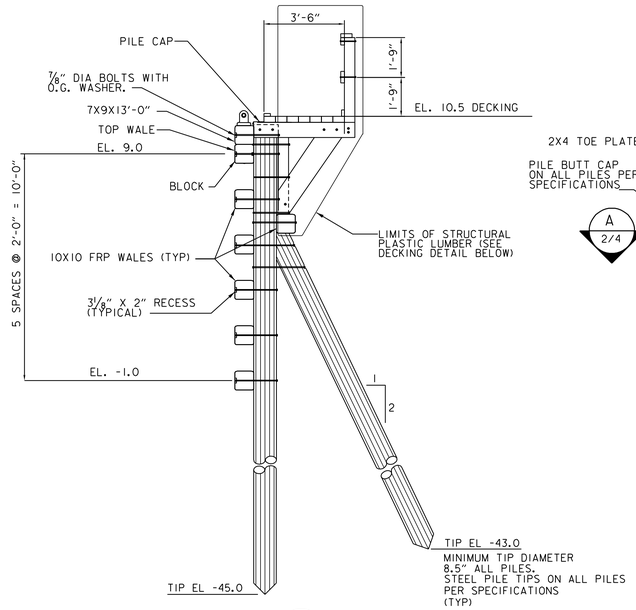

D 2/4 SECTION (TYP)
SCALE: "A"

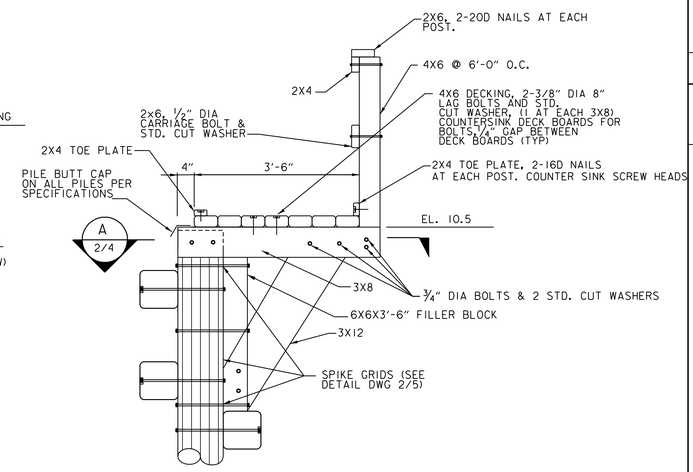

DECKING DETAIL
SCALE: "C"

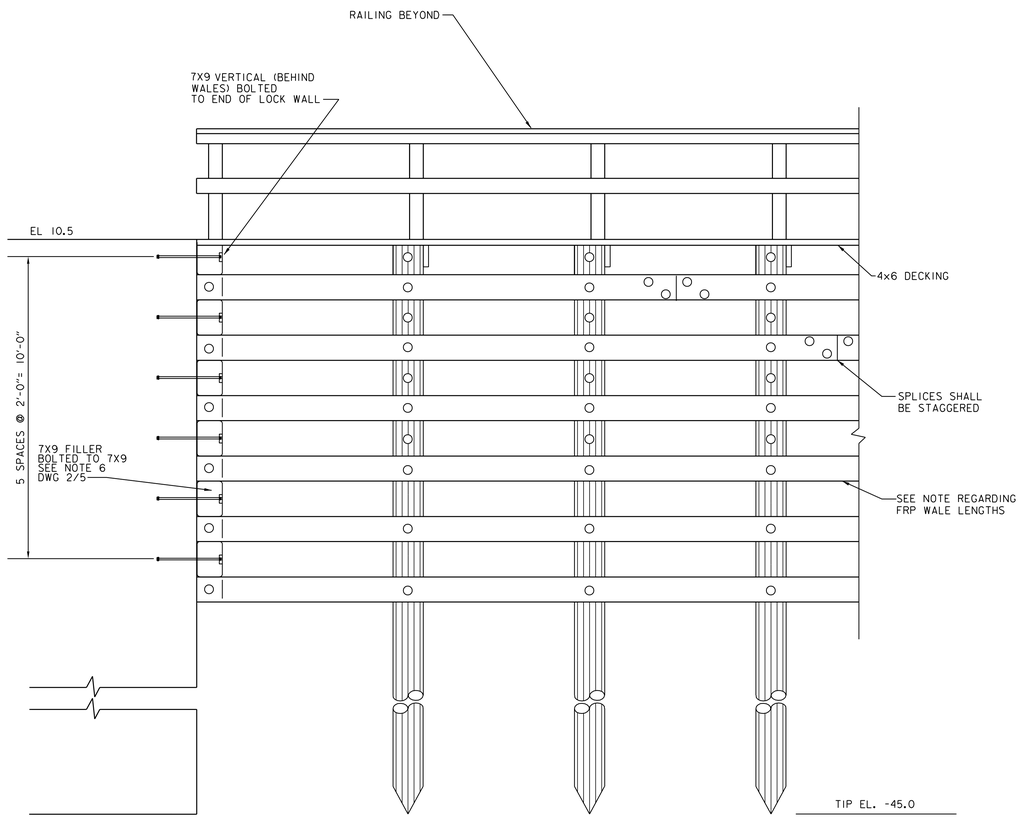

C 2/4 ELEVATION
SCALE: "B"

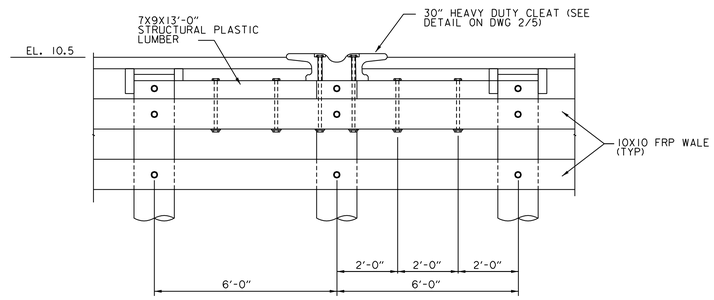

ELEVATION AT CLEAT

(NORTHEAST GUIDE WALL & SOUTHEAST GUIDE WALL)
ELEVATION SIMILAR AT NORTHWEST & SOUTHWEST GUIDWALLS
SCALE: "B"

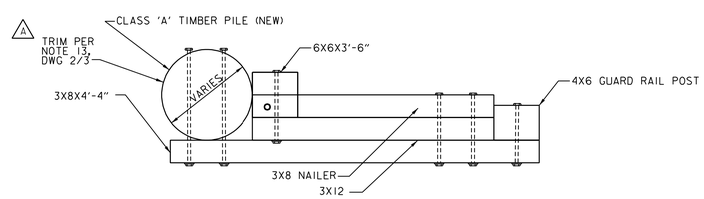

A 2/4 SECTION
SCALE: "D"

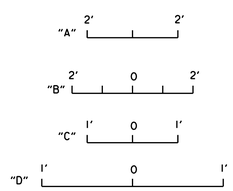

US Army Corps of Engineers
Jacksonville District

SAFETY ON THIS JOB DEPENDS ON YOU

No.	Symbol	Zone	Description	Approved
1	1	E-182	REVISED TO ACCOMPANY AMENDMENT NO. 0001	

DEPARTMENT OF THE ARMY
JACKSONVILLE DISTRICT, CORPS OF ENGINEERS
JACKSONVILLE, FLORIDA

URS Group Inc.
1600 West Cypress Creek
Campbell Causeway
Tampa, FL 33607-1462
No. 00000002

Designed by: JC
Dwn by: IZ
Ckd by: FKW
Inv. No. DACW17-02-B-0007
Dated:
Scale: AS SHOWN
Plot date:
Plot scale:
File name: 2-4.DGN
Reference files: G-BRDRD1.DGN

Dated: AUG 2001
D.O.FILE NO. 471-38,227

CENTRAL AND SOUTHERN FLORIDA PROJECT
FOR FLOOD CONTROL AND OTHER PURPOSES

REPLACEMENT OF TIMBER GUIDE WALLS AT W.P. FRANKLIN LOCK
STRUCTURE S-79
SITE WORK
GUIDE WALL DETAILS

DRAWING NO.
2/4

.../contract/2-4.dgn 06/21/2002 08:36:05 AM