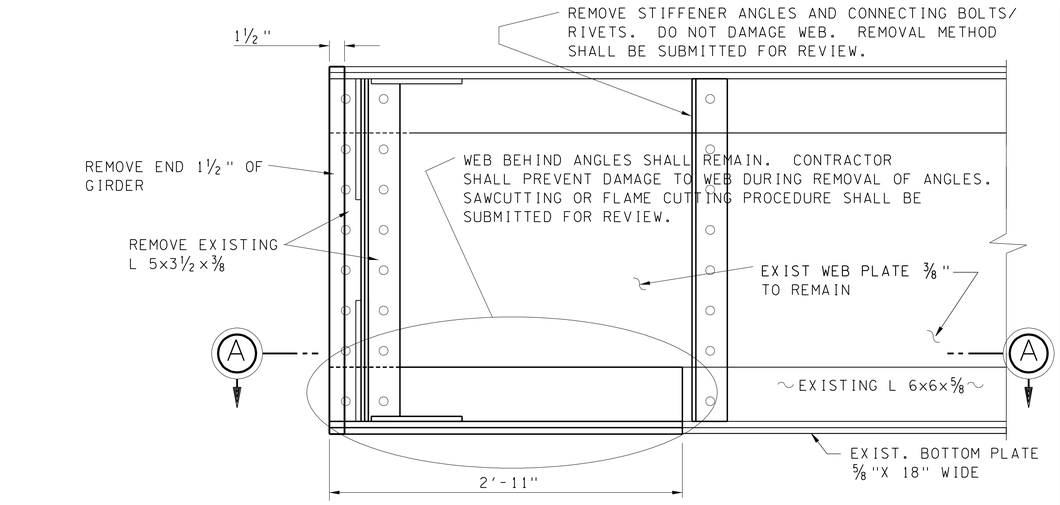

NOTE: BRACING ANGLES BEARINGS, AND VARIOUS EXISTING RIVETS AND BOLTS ARE NOT SHOWN FOR CLARITY.

ELEVATION
SCALE: "A"

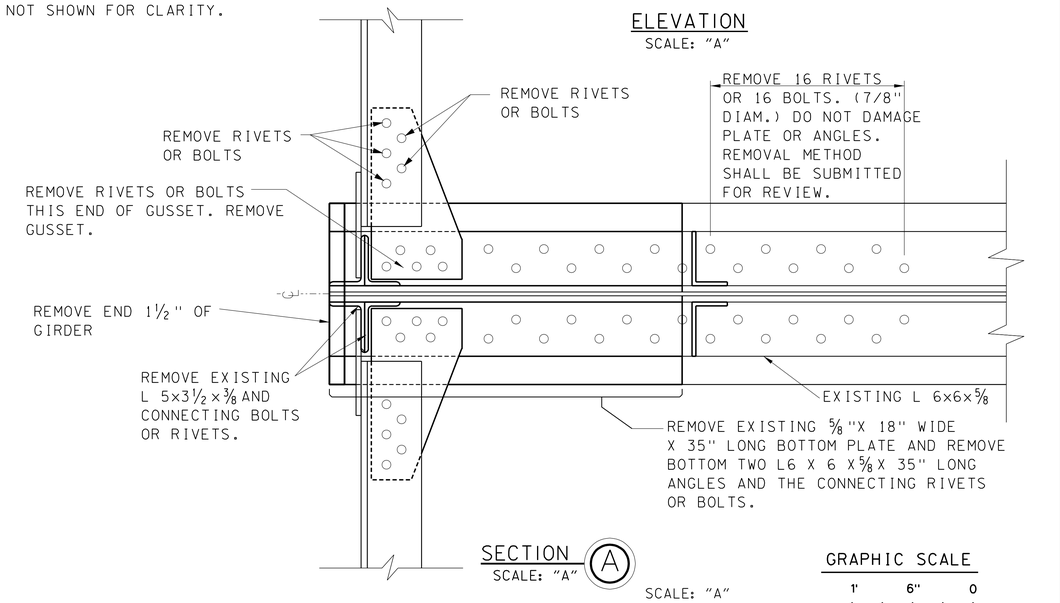

SECTION (A)
SCALE: "A"

SCALE: "A"

GRAPHIC SCALE
"A" 1' 6" 0

GIRDER END - DEMOLITION

NOTES:

1. THE CONTRACTOR SHALL COORDINATE AN INSPECTION WITH THE GOVERNMENT'S ENGINEER PRIOR TO DEMOLITION AND AFTER SANDBLASTING, PROVIDING 10 DAYS NOTICE. PRIOR TO THE INSPECTION AND AFTER SANDBLASTING, THE CONTRACTOR SHALL MEASURE THICKNESS OF WEBS, FLANGES, AND ANGLES OF AREAS TO BE REPAIRED AND PROVIDE THIS DATA TO THE GOVERNMENT'S ENGINEER FOR USE DURING INSPECTION.
2. GIRDER SHALL BE SHORED PRIOR TO DEMOLITION. SEE NOTES ON DWG 2/01.
3. DEMOLITION IS SYMMETRIC ABOUT GIRDER CENTER LINE.
4. WELDING SHALL BE IN ACCORDANCE WITH AWS D1.5.
5. FOR INFORMATION ON EXISTING GIRDERS SEE DWG 3/19. DRAWING SHOWS GIRDERS G-3 THRU G-9 WITH RIVETED CONNECTIONS. GIRDERS G-1, 2, 10, & 11 (EXTERIOR GIRDERS) ARE SIMILAR BUT HAVE BOLTED CONNECTIONS. CONTRACTOR SHALL FIELD VERIFY.

NOTES (CONT.):

6. MAINTENANCE OF TRAFFIC DURING DEMOLITION SHALL BE IN ACCORDANCE WITH NOTE 7 ON DWG. 2/03.

DEMOLITION LOCATIONS:

DEMOLITION SHOWN ABOVE SHALL APPLY TO ALL ENDS OF GIRDERS BEARING ON THE SOUTHWEST SIDE OF PIER NO. 16 AND ALL ENDS OF GIRDERS BEARING ON THE NORTHEAST SIDE OF PIER NO. 19. (DETAIL APPLIES TO A TOTAL OF 22 LOCATIONS.)

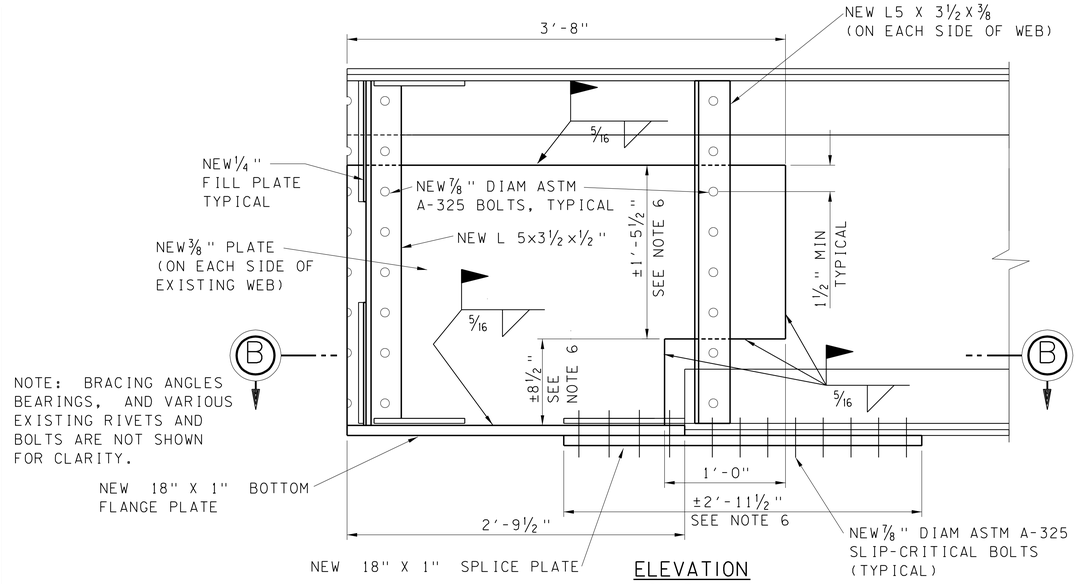

ELEVATION
SCALE: "A"

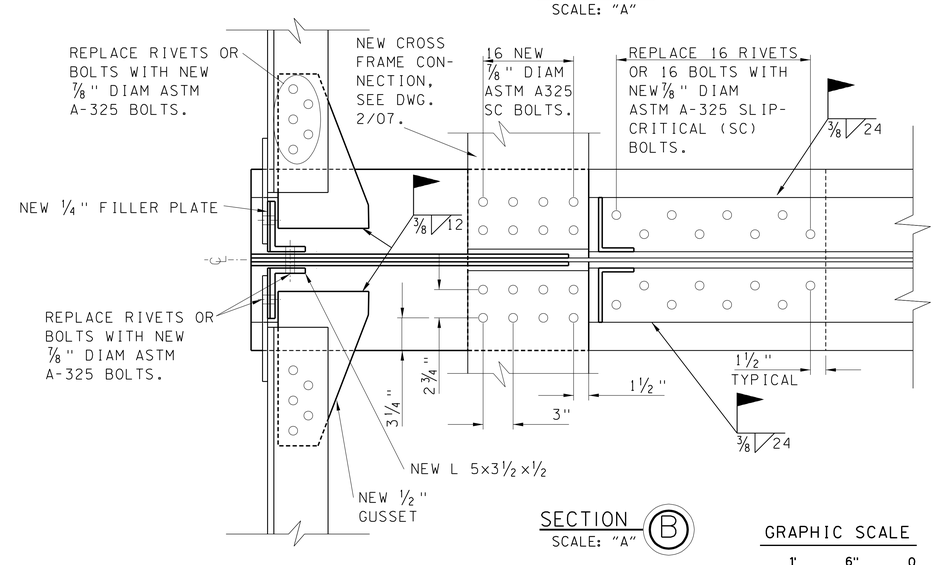

SECTION (B)
SCALE: "A"

GRAPHIC SCALE
"A" 1' 6" 0

GIRDER END REPAIR DETAIL

NOTES:

1. GIRDERS SHALL BE SHORED DURING REPAIR. SEE NOTES ON DWG 2/01.
2. ALL PLATE STEEL SHALL BE ASTM A36.
3. REPAIR IS SYMMETRIC ABOUT GIRDER CENTER LINE.
4. EXISTING GIRDERS SHALL BE TESTED TO DETERMINE CARBON EQUIVALENT. REQUIREMENTS FOR PREHEAT, POSTHEAT AND ELECTRODE TYPE SHALL BE BASED ON CARBON EQUIVALENT. A TEST SHALL BE PERFORMED ON INTERIOR AND EXTERIOR GIRDERS.
5. WELDING SHALL BE IN ACCORDANCE WITH AWS D1.5 USING E70XX ELECTRODES.
6. NEW PLATES DIMENSIONS SHALL BE ADJUSTED SO THAT EDGE OF PLATE IS BETWEEN EXISTING BOLTS TO ALLOW BOLT INSTALLATION.
7. MAINTENANCE OF TRAFFIC DURING REPAIR SHALL BE IN ACCORDANCE WITH NOTE 7 ON DWG. 2/03.

NOTES (CONT.):

8. FILL PLATES SHALL BE PROVIDED AS REQUIRED IN AREAS TO BE JOINED BY BOLTING.
9. ALL BOLTS SHALL BE FULLY PRETENSIONED IN ACCORDANCE WITH AISC "SPECIFICATION FOR STRUCTURAL JOINTS USING ASTM A325 OR A490 BOLTS".

REPAIR LOCATIONS:

THE GIRDER BOTTOM PLATE REPAIR DETAIL SHALL APPLY TO ALL ENDS OF GIRDERS BEARING ON THE SOUTHWEST SIDE OF PIER NO. 16 AND ALL ENDS OF GIRDERS BEARING ON THE NORTHEAST SIDE OF PIER NO. 19. (DETAIL APPLIES TO A TOTAL OF 22 LOCATIONS.)

US Army Corps of Engineers
Jacksonville District

SAFETY ON THIS JOB DEPENDS ON YOU

No.	Symbol	Zone	Description	Approved
1	A	H-1	REVISED TO ACCOMPANY AMENDMENT NO 0003	

DEPARTMENT OF THE ARMY
JACKSONVILLE DISTRICT, CORPS OF ENGINEERS
JACKSONVILLE, FLORIDA

Inv. No. DACW17-02-B-0002
Scale: AS SHOWN
Dated: JULY 2001
D.O.FILE NO. 111-38.213

File name: KAB0202.DGN
Reference files: KEY0200 KAB0201.DGN

RIO PUERTO NUEVO PROJECT
SAN JUAN, PUERTO RICO
CONTRACT 1A
SEISMIC RETROFIT OF CONSTITUTION BRIDGE
GIRDER END REPAIR DETAIL

DRAWING NO.
2/02
A

d:/bill/kab0202.dgn 02/14/2002 01:41:23 PM